14500 Coy Drive, Grass Lake, Michigan 49240
734-475-2200 E-mail: sales@coylab.com
www.coylab.com

Purge Airlock Instruction Manual

(For both manual and automatic systems)

Purge Airlock Instruction Manual

For Automatic and Manual Operation

Index

WARRANTY

This product is warranted against defects in material and workmanship during the first 12 months after original date of shipment.

The factory will, at its option, repair or replace defective material within this period at no charge for parts and labor.

All returns or exchanges must first be authorized by COY LABORATORY PRODUCTS, INC.

PHONE: 734-475-2200
FAX: 734-475-1846

COY LABORATORY PRODUCTS, INC.
14500 COY DRIVE
GRASS LAKE, MI 49240

The responsibility of COY LABORATORY PRODUCTS, INC. is limited to the purchase price of this product, and COY LABORATORY PRODUCTS, INC. will not be responsible for any consequential damages.

This warranty does not cover damage in shipment or damage as a result of improper use or maintenance of this product. This warranty does not cover damages caused by excessive line transients on the AC supply line.

If using a COY Heated Hypoxic or Gloveless Anaerobic Chamber please disregard the Set-Up instructions for the airlock as the gas connections are covered in the Chamber manuals. Skip to Operational section.

Set Up

1. Plug the unit into a 110 volt AC 60 Hz line or a 220 volt AC 50 Hz line, depending on the unit. A label on the back left hand corner of the airlock will display the power requirements.

2. Connect the gas line onto the gas inlet fitting. If bringing the airlock **BELOW** ambient oxygen conditions, use chamber background gas as the inlet gas.

   If bringing the airlock **ABOVE** ambient oxygen conditions, use oxygen as the inlet gas. Maximum gas inlet pressure is 15 psi.

   If a *COY* Oxygen Controller is installed with the airlock, the gas line from the controller can also be common with the airlock. **NOTE: the maximum inlet pressure for the controller is 15 psi.**

3. Connect the gas outlet from Automatic Purge unit to the gas inlet on the Airlock using the following instructions.

   To install Tygon tubing to the fittings follows the instructions listed below and Figure #1 as a reference.

   1. Place a female fitting on each end of tubing.
   2. Place 2 ty-wraps around the hose barb on the female fittings and pull them as tight as possible.
   3. Cut off excise ty-wrap.
   4. Insert Female fitting connected to the tubing to the Male fitting on the Glove Box Ball Valve. When fitting is seated correctly, you will hear a "click".
   5. To disconnect the tubing simply depress the silver tab on the male fitting and separate.

   When disconnected the fittings on the glove box automatically seal the glove box atmosphere.

   NOTE: Never purge the airlock at a higher rate than 15 psi. (with ¼" OD Tubing) Doing so could over pressurize and damage the airlock and purge unit. Damage from over pressurizing the airlock will void the warranty.

Figure # 1 Tubing connection to Quick Disconnect Fitting

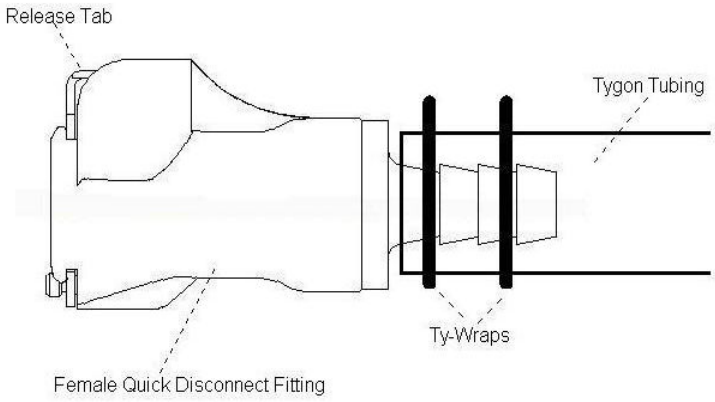

4. Set the gas flow rate into the airlock through a gas regulator.

   a. Turn the airlock on using the on/off rocker switch on the front of the unit.

   b. Close both doors.

   c. Set the time for 20 seconds according to the instructions listed in the operations section (#4). This 20 seconds time is not critical since this is only for the adjustment of the flow rates only. After the flow levels have been set press the Reset (RST) keypad to discontinue the flow of gas.

   d. Press the red start button. You should here a metallic click when the start button is pressed; this is the solenoid valve opening.

   e. While there is airflow adjust the flow valve on the flow meter, adjust the flow rate between 60 and 120 SCFH (Square Cubic Feet per Hour.) For the fastest purging use the highest possible value on your system. DO NOT EXCEED 120 SCFH.

Automatic Purge Airlock Operation

1. The airlock must be set up as described in the Set Up instructions.

2. Turn the power on using the **On/Off** rocker switch on the front of the airlock.

3. Be sure the doors are closed.

4. **Set the timer for the desired purge time in seconds.**

   a. Each of the numbers on the keypad represents a digit in the display the number one (1) keypad represents the 1st digit from the right, the 2 controls the second digit from the right and so on. The RST button is a reset button to stop a purge in progress.

   b. To change each digit press and hold the button, the numbers will cycle 0-9. Release the button when the number you desire is reached. NOTE: the 4th digit does not display a 0 but is blank instead.

   c. The timer will count down from the set time to zero, always displaying the time remaining on the purge.

Suggested purge times for given flow rates are given below. Experiment with your system to find the optimum setting for your application.

All measurements taken with a starting oxygen concentration of 20.9% (ambient)

Gas = Nitrogen 95% Carbon Dioxide 5%

Automatic Purge Airlock Times

Flow Rate (SCFH) *Standard Cubic Feet per Hour*	Time *(Seconds)*	Final O_2 Concentration in the Airlock *(%)*
90	120	3.0
90	160	1.0
90	210	.05

Manual Airlock Purge Times

Flow Rate (PSI) *Pounds per Square Inch**	Time *(Seconds)*	Final O_2 Concentration in The Airlock
15	60	2.0
15	100	0.0

**PSI is not a flow rate but for purposes of the manual airlock it can serve it's purpose with the COY supplied ¼" OD Tygon Tubing.*

Never Purge the airlock at a rate higher than 15 psi with ¼ OD Tubing.

Above Ambient Airlock Purge Times

Gas = Oxygen 95% Carbon Dioxide 5%

Automatic Purge Airlock Times

Flow Rate (SCFH) *Standard Cubic Feet per Hour*	Time *(Seconds)*	Final O_2 Concentration in the Airlock *(%)*
20	18	35
20	30	55

5. Press the start button and be sure the gas flow rate is correct. **Warning:** you must check the flow rate as there is no warning light for lack of gas flow. The LED on the controller will start to blink. Upon completion of the selected time this LED will stop blinking.

Front Panel Diagram

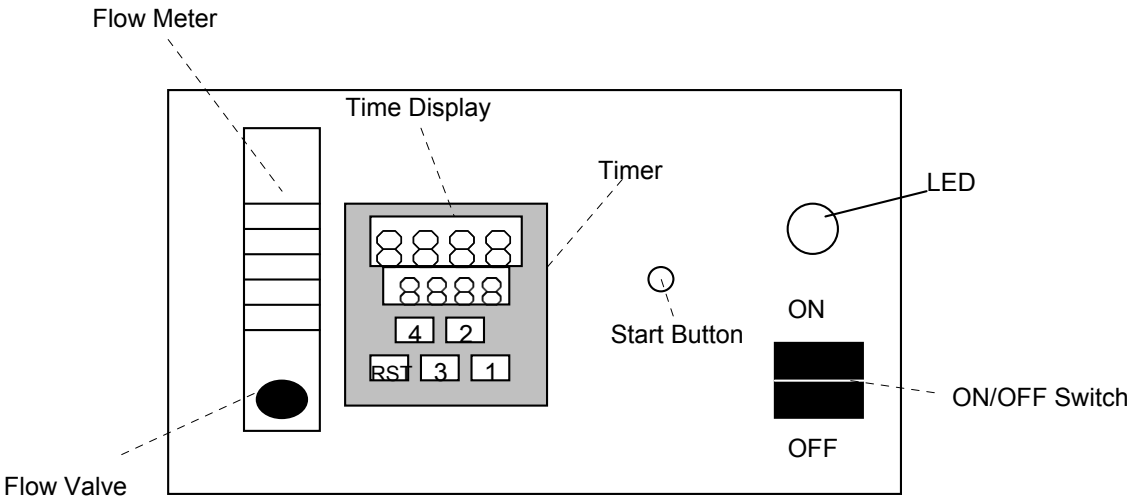

Button Controls

RST = Reset
4 = Controls the 4th digit in the set point
3 = Controls the 3rd digit in the set point
2 = Controls the 2nd digit in the set point
1 = Controls the 1st digit in the set point

Rear Panel Diagram

Not seen on Gloveless Anaerobic Chambers or Heated Hypoxic Units.

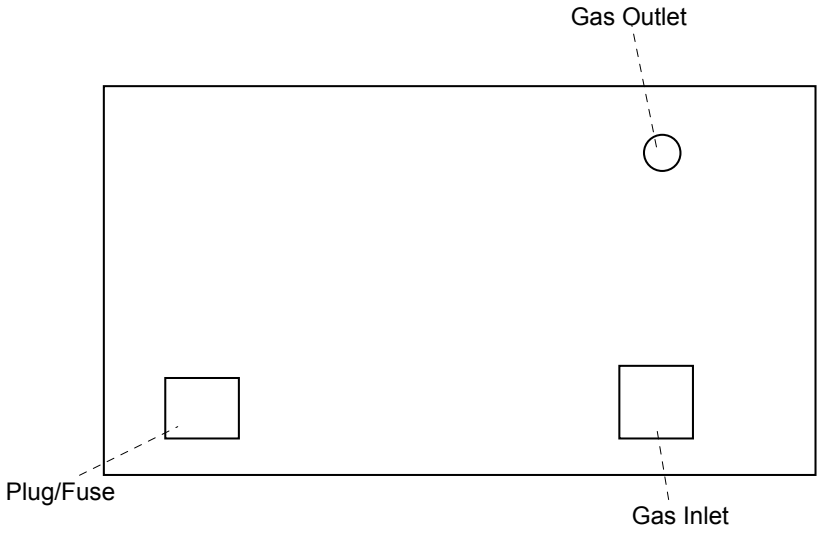

NOTES