14500 Coy Drive, Grass Lake, Michigan 49240
734-475-2200 E-mail: sales@coylab.com
www.coylab.com

Rigid Anaerobic Chamber Instruction Manual

For Gloved Units with Vacuum Airlock Option

COY Rigid Anaerobic Chamber
(Vacuum Airlock Option)
OWNER'S MANUAL

1.0 DESCRIPTION

Warning

Do not use **PURE** hydrogen in establishing your chamber environment. Use only pre-mixed gases.

The use of pure hydrogen, or pre-mixed gases with a hydrogen content of greater than 4%, may cause an explosive mixture to exist in your chamber. Warranty will be voided if more than 4% OSHA Standard is used.

Never pull a vacuum on Polymer or Aluminum Glove Box. This could crack/damage the glove box and void the warranty.

LATEX WARNING
Latex gloves with powder may be installed on this equipment. Some People are allergic to latex and/or the powder. Coy Laboratory Products cannot account for the content of gloves bought from other vendors.

PURGE
Never Purge the glove box with more than 15 psi on ¼" diameter tubing.

1.1 WARRANTY

The electronic components contained in this chamber are warranted against defects in material and workmanship during the first 12 months after original date of shipment.

The factory will, at its option, repair or replace defective materials within the above periods at no charge for parts and labor. Shipping cost are not covered by the warranty

All returns or exchanges must first be authorized by Coy Laboratory Products, Inc.

Phone: 734-475-2200
Fx: 734-475-1846
E-mail: sales@coylab.com

Coy Laboratory Products, Inc.
14500 Coy Drive
Grass Lake, MI 49240

The responsibility of Coy Laboratory Products, Inc., is limited to the purchase price of this product, and Coy Laboratory Products, Inc. will not be responsible for any consequential damages.

This warranty does not cover damage in shipment or damage as a result of improper use or maintenance of this product. This warranty does not cover damages caused by excessive line transients on the AC supply line.

1.2 GENERAL OVERVIEW

1.2.1 This manual is designed to provide you with basic knowledge of a Coy Aluminum or Polymer Glove Box and the components supporting it for an anaerobic application with vacuum airlock. The manual provides insight on how to assemble, operate, and maintain the glove box. We strongly recommend that all laboratory personnel and glove box users read the manual to become familiar with assembly, operation, care, maintenance, and theory of anaerobic conditions.

1.2.2 The Polymer Glove Box is available in three, four, or five foot lengths and is constructed of Polycarbonate or optional UV Resistant Acrylic. The 3 ft. length model has two arm ports. The 4 ft. Glove Box is equipped with 3 glove ports, with the port closest to the airlock equipped with a sleeve length glove for quick and easy access to the airlock. The 5 ft. length has 4 arm ports. The Polymer Glove Box comes equipped with a large removable back panel to allow introduction of large equipment prior to establishment of chamber atmosphere. The Airlock is located on the left hand side of the glove box unless otherwise requested at time of order.

1.2.3 The Aluminum Glove Box has 2 standard sizes: 3 ft. (2 glove ports) and 6 ft. (4 glove ports). Included on all aluminum anaerobic chambers is a Large Side Door on one end to allow the introduction of equipment, and an Airlock on the other end for samples, tools etc., to be moved in or out of the glove box without compromising the atmosphere.

A Fan Box is supplied with the Chamber (two in the 6 ft. Aluminum size) to ensure a uniform anaerobic environment. The Fan Box circulates the Chamber's atmosphere through palladium catalyst to remove oxygen. It should be noted here that **HYDROGEN** must be present in order for the palladium catalyst to properly remove oxygen (see section 2.0 Theory of Design for more details). The Palladium Catalyst is contained within a COY Stak-Pak that sits conveniently on top of the fan box. These Fan Boxes may be laid length wise or stood on end with the fan cage facing up.

1.3 CHAMBER ASSEMBLY

1.3.1 Before shipment, all parts have been assembled and tested for leaks.

For Set Up:

1. Remove all packing material. Place the Arm Port Plugs on the interior of the glove box but all other items should be removed from the interior and inspected for damage that may have occurred in shipping. Inspect the Arm Port Plugs as well before placing them in the appropriate holders secured to the wall of the glove box (see Figure #1 on page 4).

Figure #1: Installation of Arm Port Plugs

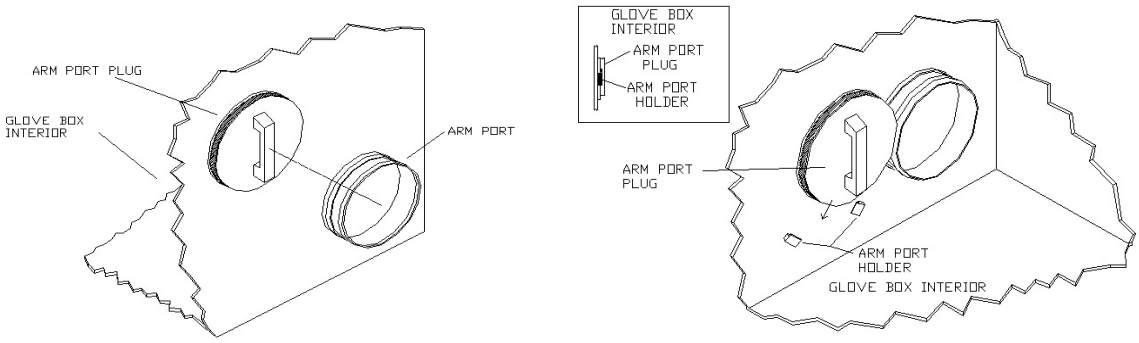

2. **Installing tubing to COY fittings:** You will notice that the tubing and fittings do not come assembled from the factory. You will need to cut this tubing and attach it to the additional COY fittings to connect the tanks of gas, Airlock, and any other accessory purchased such as the Automatic Gas Injection System. Use the instructions listed below and figure #2 and #3 to attach the tubing to the supplied fittings. Use Figure #4 and #5 (and instructions listed below) for guides on where the tubing should be connected.

   A. Place a female fitting on each end of tubing. (male fittings are installed on the equipment at the factory)
   B. Place 2 ty-wraps around the hose barb on the female fittings and pull them as tight as possible.
   C. Cut off excise ty-wrap.
   D. Insert Female fitting connected to the tubing to the Male fitting on the Glove Box Ball Valve. When fitting is seated correctly, you will hear a "click".

For the Tee Fitting the same instructions apply (figure #3)

To disconnect the tubing, depress the silver tab on the male fitting and separate.

Figure # 2 Tubing connection to Quick Disconnect Fitting

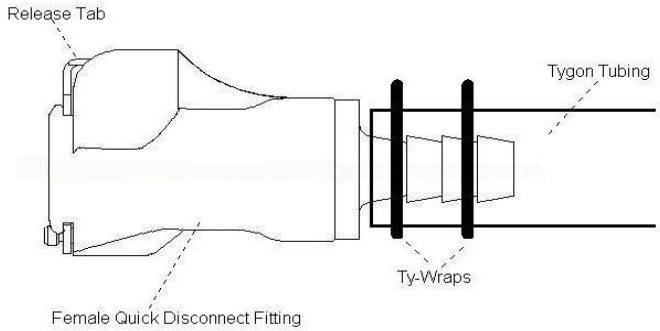

Figure # 3 Tubing connection to Tee Fitting

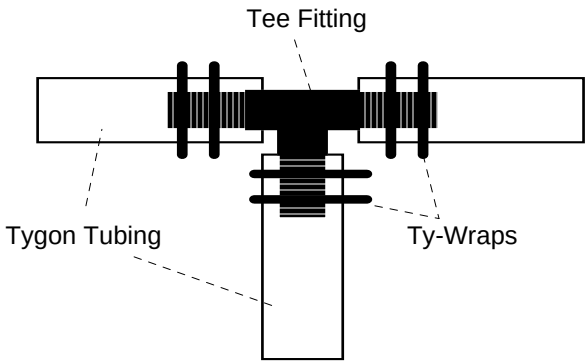

3. Using the tygon tubing supplied, attach the gas mix regulator (supplied) to your gas mix tank and connect to the gas mix inlet on the back of the airlock. See figure #7 page 12 for Airlock rear panel gas connections. The gas regulator should be adjusted to 15 psi (pounds per square inch) output. Use Figure #4 (page 6)and #5 (page 7) for Glove Box Gas Connections.

4. Attach the background gas regulator (supplied) to your background gas tank. Using the Tygon Tubing provided, connect the background tank to the Background Gas Inlet on the rear of the airlock. Again, the Gas Regulator should be adjusted to 15 psi.

Figure #4 Glove Box Gas Connections0

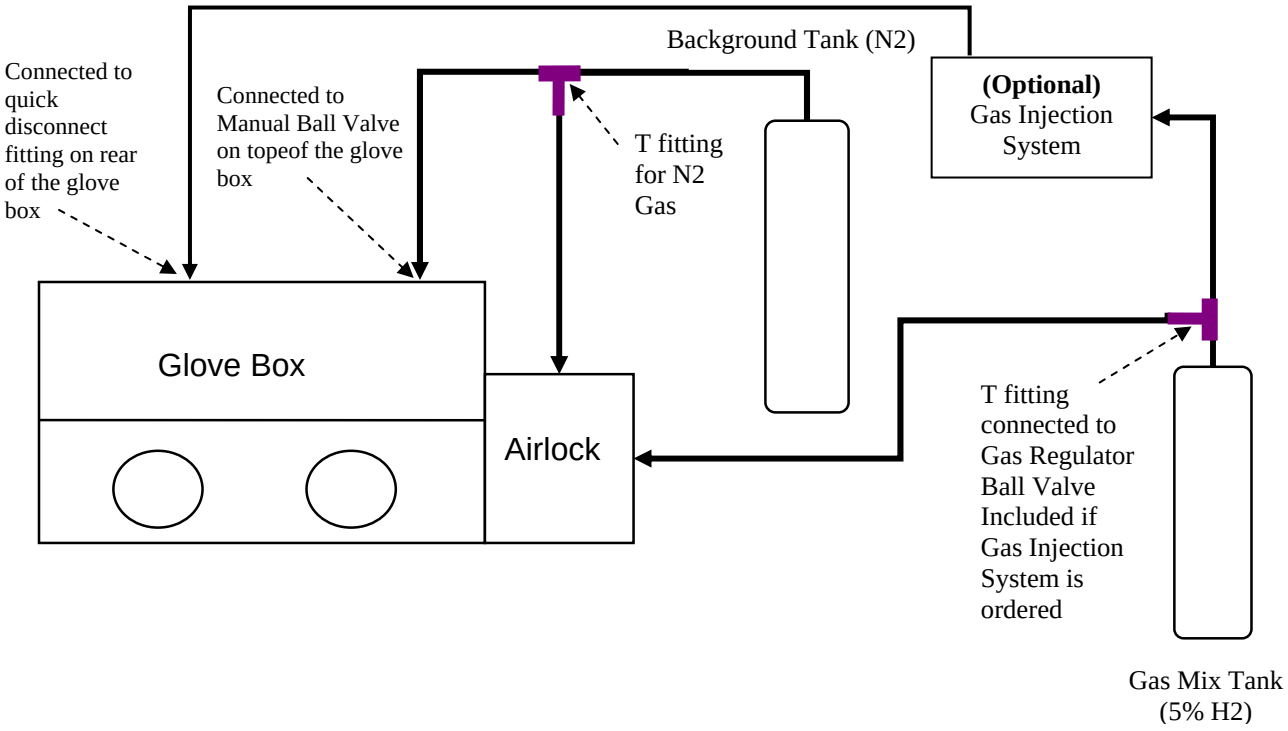

5. Using the remaining tubing you have the option to connect the manual ball valve located on the top right hand corner of the glove box using the extra “T” fitting and extra tubing (see figure #5/ page 7).

Connecting to the manual ball valve will make it easier to establish initial anaerobic environments or any time a large purge is necessary.

To connect to the airlock and the ¼” ball valve on the glove box cut the length of tubing between the Background Gas Regulator and the Airlock. Insert the “T” fitting from either end of the 2 cut ends and secure as described above (Figure #3). Use the remaining tubing to connect to the Ball Valve on the top corner of the airlock side of the glove box. Use Figure #5 for details on this connection.

Figure # 5 Optional Glove Box Gas Connections

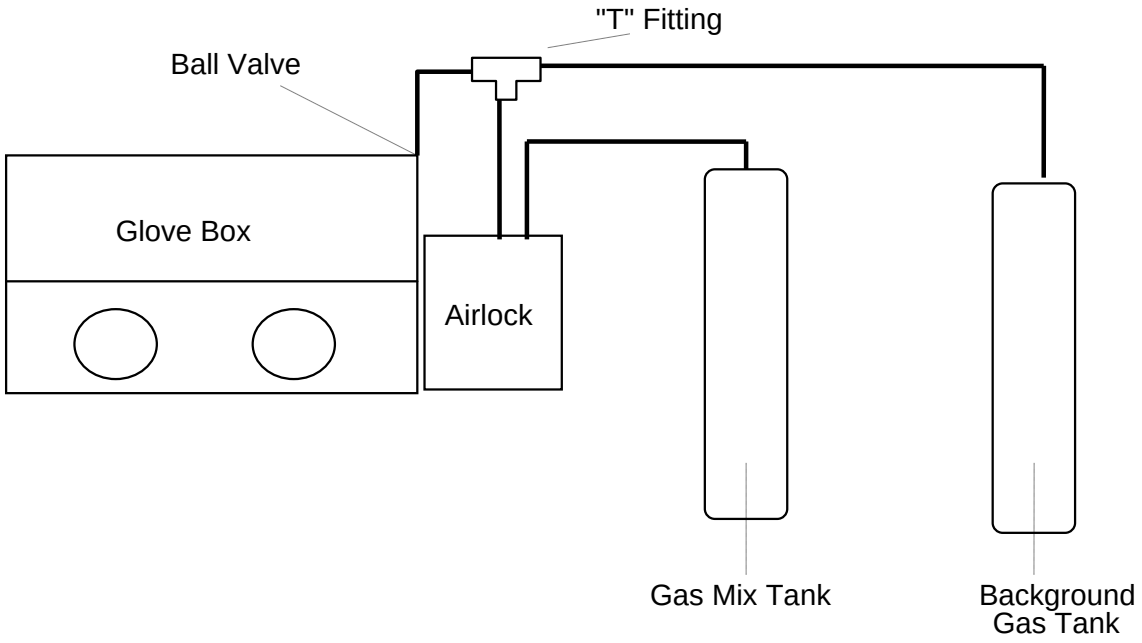

6. Large equipment will be placed inside the chamber through the Large Side Door (aluminum glove box) or removable rear panel (polymer glove box). See figure # 6 for typical glove box floor plans.

NOTE: The fan box with the catalyst is placed as close to the airlock as possible. This position allows the catalyst positioned on top of the fan box to eliminate the bulk of the O2 entering the glove box through the airlock as quickly as possible.

NOTE: If the COY Model 10 Gas Analyzer has been purchased, then a special shelf dedicated to the analyzer has been included in the chamber (not shown in floor plan drawings).

Figure # 6 Typical Glove Box Floor Plans

6 ft. Size (Aluminum Glove Box only)

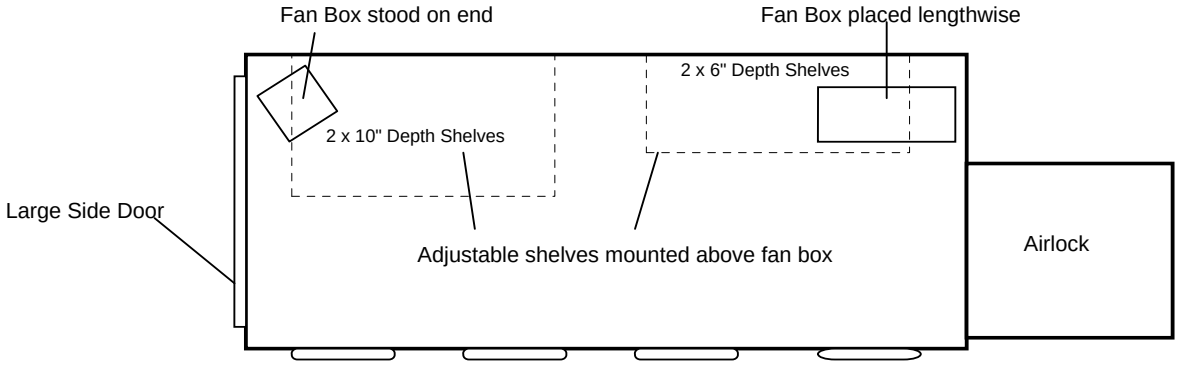

3 ft. Glove Box

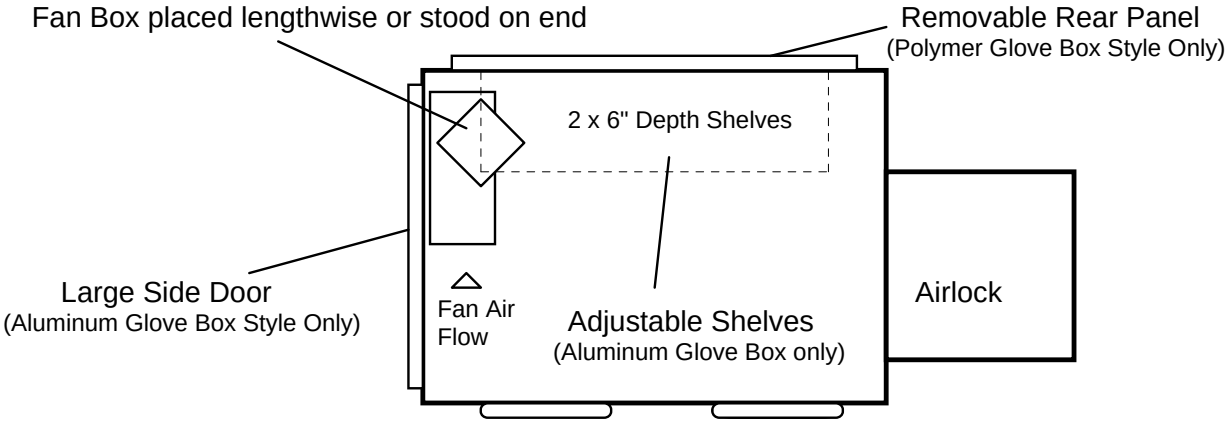

Figure #6 Continued -- Glove Box Floor Plans

4 ft. Polymer Glove Box

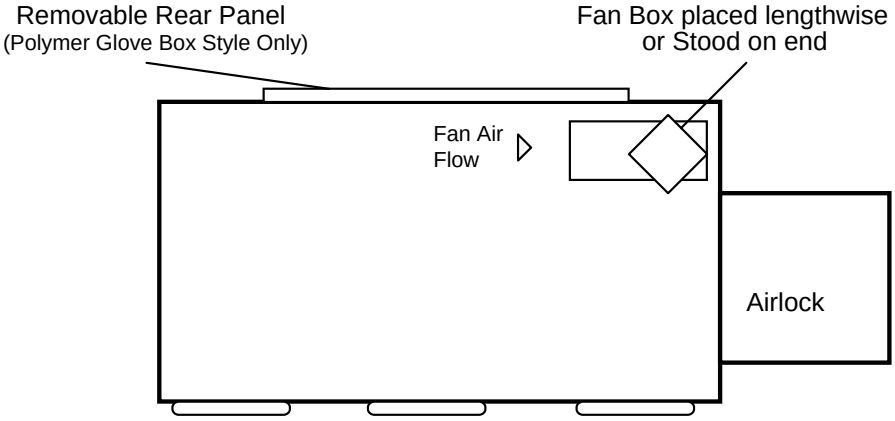

5 ft. Polymer Glove Box

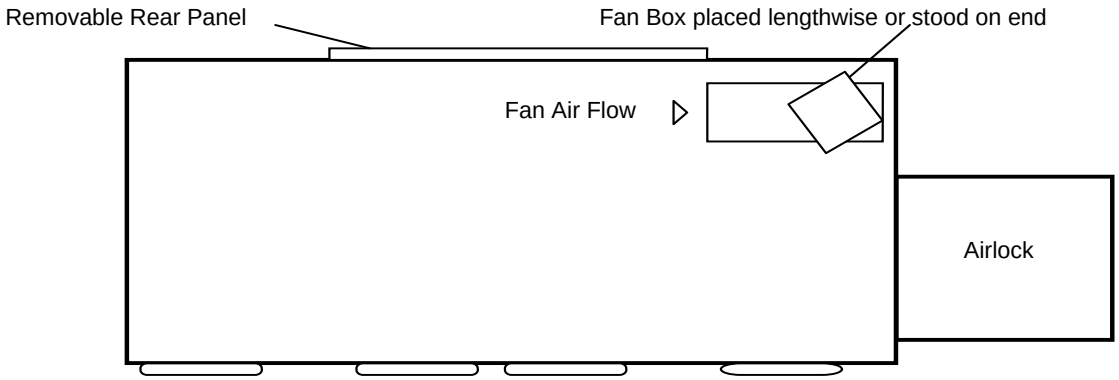

2.0 Purging the Chamber & Getting Started

2.1 This section will explain how to purge the Chamber and establish an anaerobic environment.

NOTE! DO NOT INTRODUCE CATALYST INTO THE CHAMBER UNTIL THE PURGE OPERATION IS COMPLETE.

1. Plug the Fan boxes into the interior plug strip provided. If the fan boxes are the heated models, adjust the temperature set point (*see heated fan box manual)* so that the heating elements do not turn ON during the initial set up procedure.

2. Close the large door or seal the removable rear panel on the Polymer Glove Box. Open the inner airlock door and close the outside airlock door.

3. Make sure the pressure relief valve is not blocked. Depending on how you choose to "plumb" the gas connection (section 1.3) you can now begin to purge the glove box with your background gas.

   If you choose to just hook up to the airlock, you will use the manual momentary toggle switch on the back of the airlock. This toggle switch will have to be held down by an individual during the entire purge. **If you've connected the Manual ¼" Ball Valve on the top right hand corner of the glove box, you may use this for the purge procedure.**

4. Begin to purge the chamber with your Background gas. The flow rate is determined by your gas regulator (DO NOT EXCEED 15 PSI.) Using the chart below, purge the chamber for the set length of time determined by your glove box size.

This purge reduces the oxygen level with an inert gas prior to the introduction of catalyst and gas mix (hydrogen 4%).

Time of purge at 15 psi

3 ft. **Polymer** Glove Box (10.5 cu. ft.)	5:00 minutes
4 ft. **Polymer** Glove Box (14.5 cu. ft.)	6:00 minutes
3 ft. **Aluminum** Glove Box (16.5 cu. ft.)	6:30 minutes
5 ft. **Polymer** Glove Box (18 cu. ft.)	7:00 minutes
6 ft. **Aluminum** Glove Box (30 cu. ft.)	11:00 minutes

NOTE: You must time this operation manually. When finished, turn the manual ball valve completely off. If using the momentary toggle switch on the rear of the airlock, this will automatically close when released.

During the chamber purge you will notice the diaphragm top will inflate to its maximum height, this is normal and will not harm the vinyl. The incoming gas will push out existing chamber atmosphere(O2) through a Pressure Relief Valve mounted on the back wall of the chamber on the opposite end from the Airlock.

5. Leaving the inner airlock door open, remove your hands from the gloveless sleeves (remember to seal the arm ports with the Arm Port Plugs). Once outside the chamber, use the anaerobic **gas mix** toggle switch on the back of the airlock to purge the system with your hydrogen gas mix (see figure #7 page 13). If you have purchased the COY Model 10 Gas Analyzer then you may simply purge until you achieve the desired hydrogen mix level.

Note: Depending on the glove box size you will only have a portion of the percent gas mix from the tank ie; a 4% H2 tank will only produce a 3%-3.3% H2 atmosphere mix inside the glove box.

6. With the inner airlock door closed, open the outer airlock door and place one catalyst Stak-Pak for every fan box inside the airlock. Close the outside door and run one complete cycle of the airlock (see airlock manual).

7. After the airlock cycle is completed enter the glove box through the gloves. Open the inner airlock door, and bring the catalyst Stak-Pak (s) into the glove box. Place the Stak-Pak (s) on to the tray holder of the Fan Box.

   When palladium catalyst is introduced to an environment rich in oxygen and hydrogen the palladium coated pellets generate heat as the 3 components (Catalyst, oxygen and hydrogen) react with each other.

WARNING: IF YOU ARE USING CATALYST THAT IS NOT CONTAINED IN A COY STAK-PAK, MAKE SURE IT DOES NOT SPILL ONTO THE CHAMBER FLOOR. THE HEAT FROM THE PELLETS MAY DAMAGE THE GLOVE BOX INTERIOR.

8. If you do not have a COY Model 10 Gas Analyzer use the following chart for approximate purge times necessary to introduce the appropriate hydrogen levels.

Time of Gas Mix purge at 15 psi

3 ft. **Polymer** Glove Box (10.5 cu. ft.)	2:00 minutes
4 ft. **Polymer** Glove Box (14.5 cu. ft.)	2:15 minutes
3 ft. **Aluminum** Glove Box (16.5 cu. ft.)	2:30 minutes
5 ft. **Polymer** Glove Box (18 cu. ft.)	2:45 minutes
6 ft. **Aluminum** Glove Box (30 cu. ft.)	4:00 minutes

These times assume the chamber to be empty of tubes and petri dishes and any other equipment. After about 1 hour, repeat this procedure to replenish hydrogen levels that are consumed.

After the purging operation, you may observe a build up of condensation on the chamber walls; this is a signal that everything is working properly. If the moisture continues to collect, you may require desiccant stak-paks to remove the excess moisture.

If the catalyst becomes extremely hot or glowing red, this is a sign that the system was not properly "purged". Immediately discontinue the Gas Mix purge and purge the chamber with the background gas a few additional minutes.

9. During the next 24-48 hours, you should monitor the oxygen content in your Chamber using Coy's Oxygen/ Hydrogen Analyzer. After the first 24 hours of operation, you should manually purge the system with the gas mix, following the same procedure listed above. This purge allows more hydrogen to enter the Chamber's atmosphere, as a great deal of the hydrogen is consumed in removing the initial levels of oxygen in the glove box. If the Chamber is left unattended for several days, it may lose anaerobic condition due to lack of hydrogen. For this reason, Coy recommends using the Oxygen/Hydrogen Analyzer to monitor your Chamber's hydrogen content. The COY Automatic Gas Injection System (part #8100-110) can also help maintain proper hydrogen levels automatically by purging in your gas mix at pre-set intervals (fully adjustable).

10. The catalyst Stak-Pak should be rejuvenated at least once a week for it to maintain its usefulness. If you have a very busy chamber, you will find that you need to rejuvenate the Catalyst more frequently, perhaps two or three times a week.

    NOTE: After the initial set-up, you should place fresh catalyst in the chamber and rejuvenate the catalyst stak-paks you started with as these will be saturated with moisture from the start up procedure.

Figure #7 Rear Panel of Vacuum Airlock

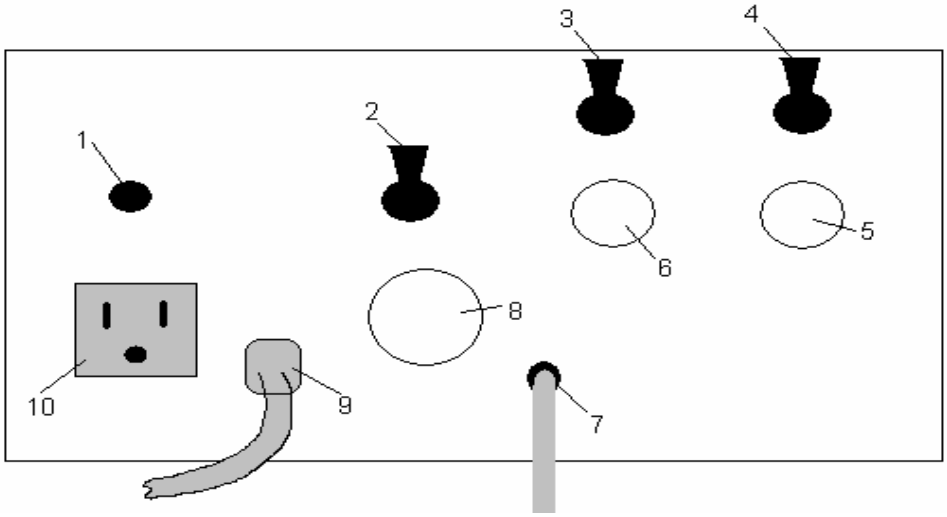

1. 15 amp Fuse
2. Manual Vacuum Switch
3. Manual Nitrogen Switch
4. Manual Gas Mix Switch
5. Gas Mix Inlet (attach Premixed Anaerobic Gas Line Here)
6. Background Inlet (attach Background Gas Line Here)
7. Magnetic Door Switch Wire Housing
8. Vacuum Port (Attach Vacuum Tubing Here)
9. Power Cord
10. Vacuum Pump Power Outlet

3.0 OPERATION OF COMPONENTS

This section will briefly describe the operation of both standard and optional equipment that may have been supplied with your Chamber. Standard Equipment are items included in the Chamber package, such as:

1. AUTOMATIC VACUUM AIRLOCK
2. CATALYST FAN BOXES
3. GAS PRESSURE REGULATORS
4. GAS LEAK DETECTOR
5. DIAPHRAGM TOP

Optional equipment are items not included in the Chamber package, but must be specified, such as:

1. OXYGEN/HYDROGEN ANALYZER
2. INCANDESCENT FLAMING DEVICE
3. DESICCANT STAK PAKS
4. ATMOSPHERE FILTER
5. GAS INJECTION SYSTEM

NOTE! For more complete operating instructions, please read the enclosure which comes with each piece of equipment. The following abbreviated instructions are for convenient reference only.

3.1 STANDARD EQUIPMENT

1. AUTO VACUUM AIRLOCK

This unit Vacuums and Purges the airlock through 3 cycles to establish low oxygen levels. The first 2 vacuum cycles are followed by a purge of nitrogen gas, the third and final vacuum is followed by a purge of the gas mix (4% hydrogen). This cycle will reduce the amount of oxygen that is introduced to the chamber when bringing in materials and equipment.

At the end of one complete cycle, ambient oxygen (209,000 ppm) will be diluted to 7,639 ppm. To determine the amount of oxygen that will enter your chamber, a dilution factor must be established between the airlock and your chamber. To do this, divide the airlock's volume (2,868 cu. in.) by the chamber's volume. The dilution factor for the Glove Boxes Covered by this manual are:

Size	DILUTION FACTOR
6 ft. Aluminum Glove Box (62,208 cu. in.)	.046
3 ft. Aluminum Glove Box (31,104 cu. in.)	.092
3 ft. Polymer Glove Box (20,736 cu. in.)	.138
4 ft. Polymer Glove Box (27,648 cu. in.)	.103
5 ft. Polymer Glove Box (34,560 cu. in.)	.082

To calculate the amount of oxygen that will enter your chamber, multiply the amount of oxygen remaining in the airlock after one complete cycle (7,639) by the dilution factor of the chamber. The calculated values are as follows:

Size	AMOUNT OF OXYGEN ENTERING GLOVE BOX
6 ft. Aluminum Glove Box (62,208 cu. in.)	351 ppm
3 ft. Aluminum Glove Box (31,104 cu. in.)	702 ppm
3 ft. Polymer Glove Box (20,736 cu. in.)	1,054 ppm
4 ft. Polymer Glove Box (27,648 cu. in.)	786 ppm
5 ft. Polymer Glove Box (34,560 cu. in.)	626 ppm

2. DIGITAL HEATED FAN BOXES

The Heated Fan Box (sometimes called Catalyst Boxes) consists of a power switch, 2 heating cones, and a variable controlled thermostat. The Heated Fan Box can maintain the Glove Boxes temperature from ambient to about 40 degrees Celsius.

Before operating the Fan Box, remove the heat shield, screw the heating cones into their sockets, and replace the heat shield. When the Fan Box is plugged in to a suitable outlet, the fan will turn on and the controller display will light up showing the ambient temperature. The thermostat will

control the temperature by turning the heat cones "on" and "off". When the cones are "on", a dot appears to the left of the temperature reading. The fan runs continuously while the power switch is "on" regardless of temperature setting.

3. GAS LEAK DETECTOR

The Gas Leak Detector senses hydrocarbons (hydrogen gas mix) and will detect pin hole leaks in the Anaerobic Chamber. To operate the Gas Leak Detector, twist the black knob. Turn the unit on by turning the black knob to the maximum setting. After several minutes, turn the knob down to the minimum setting and listen for a fast, high frequency beeping tone to slow down, this may take several minutes. The longer the sensor sets the longer “warm up” period is required.

Rotating the black knob varies the speed of the tone. To detect leaks, turn the black knob so that the tone is at the slowest rate. Then turn the knob in the opposite direction so the beeping tone is on the verge of speeding up. Now you are ready to detect leaks. The Gas Leak Detector is energized by a single size "C" battery. Periodically you will have to replace the battery. To do this, remove the 4 screws securing the front panel. The "C" battery is accessible for replacement.

4. GAS PRESSURE REGULATOR

Gas Pressure Regulators decrease the pressure exiting from your gas supply (primary pressure) to a pressure suitable for the Airlock (secondary pressure). Pressure to the Airlock MUST NOT exceed 15 psi. The Gas Regulator supplied should be used with a gas mix tank of no more than 4% Hydrogen. The Gas Regulator attaches directly to the supply tank. The gas mix Regulator has a male “Quick-Disconnect” fitting. Flexible Tygon tubing connects the Regulators to the Glove Box and Airlock.

Once the Gas Regulators are installed, SLOWLY open the supply tank valves. The primary pressure gauge will now display the amount of gas remaining in the tank. Turn the pressure gauge valve to regulate the gas flow to the airlock (secondary pressure gauge) to read 15 psi .

5. DIAPHRAGM TOP

The Diaphragm Top is the vinyl material on top of the glove box that expands and contracts as your hands enter and exit the glove box. The purpose of this feature is to allow easy entrance/exit of your hands in/out of the glove box. This device will also save you money from a gas consumption stand point as the expensive gas mix is not exhausted to lab atmosphere every time you enter the glove box through the arm ports.

3.2 OPTIONAL EQUIPMENT

1. OXYGEN/HYDROGEN ANALYZER

Coy Labs Oxygen/Hydrogen Analyzer is designed to monitor the oxygen/hydrogen content inside an Anaerobic Chamber. It has two independent digital readouts that display oxygen in parts per million (ppm) and hydrogen in percent(%). To operate the Analyzer, simply plug it into a suitable outlet (plug strip) on the interior of the Anaerobic Glove Box and allow 1 hour for it to stabilize. It will then correctly display the oxygen and hydrogen content inside the Chamber.

The Analyzer has two separate alarms; one for the oxygen channel and one for the hydrogen channel. The oxygen alarm is user adjustable (preset at the factory to 300 ppm) by simultaneously depressing the "ALARM CONTROL" switch and rotating the "ALARM SET" pot with a small screwdriver. If the oxygen content inside the Chamber exceeds the preset value, an audible and visual alarm will indicate a high oxygen content.

The hydrogen alarm is not user adjustable, it is preset at the factory to 1% for low hydrogen condition and 10% for high hydrogen condition. As with the oxygen channel, the hydrogen channel also has an audible and visual alarm. If the hydrogen content goes below 1% or above 10%, the alarms will indicate a problem.

<u>CAUTION</u>. Gas mixes containing more than 4% hydrogen may be flammable.

Warning: The Model 10 Gas Analyzer is designed to only monitor the atmosphere of an Anaerobic Chamber. It should never be used to control the mixing of your own gas for use in these or any other chambers. Purchase and use only certified pre-mixed gases.

2. INCANDESCENT FLAMING DEVICE (IFD)

To operate the IFD, plug the unit into the plug strip inside the chamber. Then run the foot switch through a feed through adapter. On new Anaerobic Chamber units an extra Feed Through Adapter will be provided. An IFD that is added to an existing chamber will have to be modified in the field.

Every time the foot switch is depressed the IFD turns on, and in a few seconds the "Nichrome" wire loop will turn bright red. To flame a bacteria loop, simply insert the loop into the hot wire coil and withdraw it slowly. When the foot switch is released, the IFD will turn off. The IFD is designed to operate on an intermittent basis only. IT SHOULD NEVER BE LEFT UNATTENDED WHILE IN OPERATION. Periodically, you will have to replace the "Nichrome" wire loop. To do this, unscrew two terminals holding the old "Nichrome" wire loop. Then, insert the new "Nichrome" wire loop and tighten the terminals. You may have to spread the leads on the new loop to achieve a satisfactory fit.

3. STAK PAK

Stak-Paks are constructed of a clear anodized aluminum frame and stainless steel screen. Their purpose is to provide users flexibility when adding chemicals to the chamber in order to produce a controlled environment.

NOTE: Both heated and unheated Catalyst Boxes can accept Stak-Paks mounted diagonally.

Examples of chemicals the user can place in a Stak-Pak

1. ADDITIONAL PALLADIUM CATALYST
2. DESICCANT
3. ACTIVATED CHARCOAL

Aluminum and stainless steel construction allows the user to elevate rejuvenation temperature and decrease time.

NOTE: See Section 4.3 (page 20) for details on controlling moisture with Desiccant Stak-Paks.

Figure #8 Multiple Stak-Pak Mounting

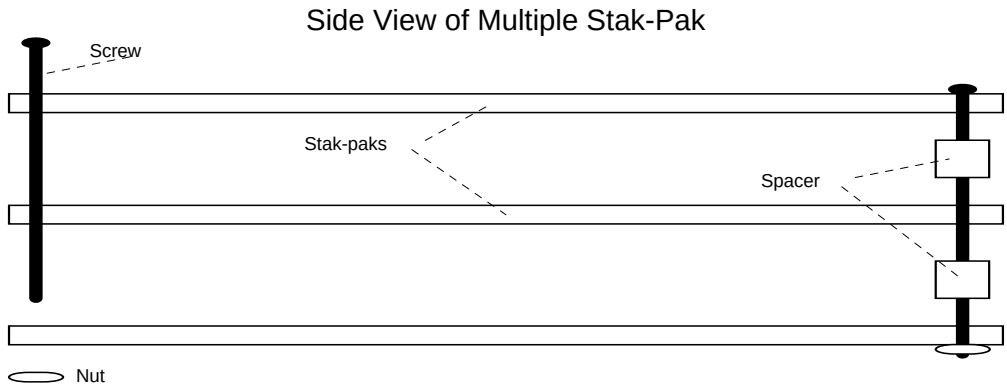

Figure #8 Stak-Pak Mounting - continued

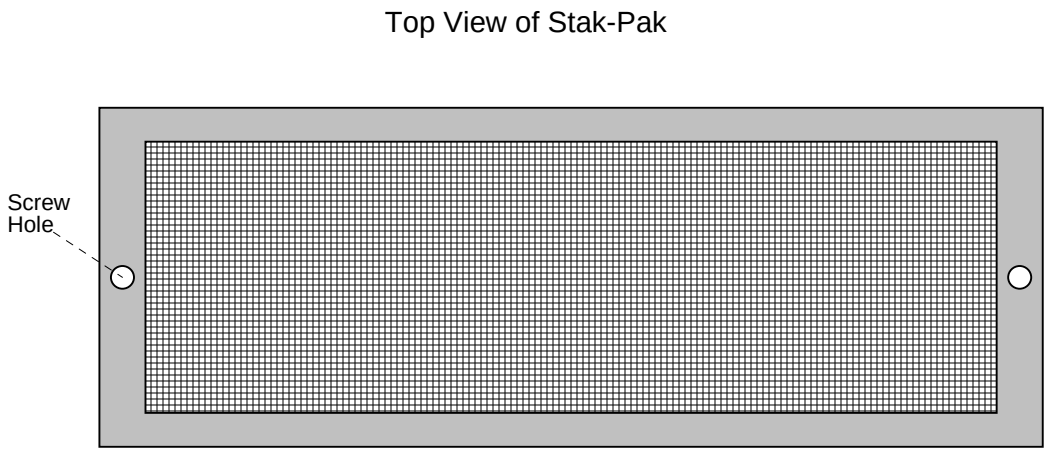

Desiccant Stak-Paks

The desiccant Stak-Paks are designed to maintain ambient humidity levels in the COY Anaerobic Chambers, however high volume and a busy chamber (lots of airlock and sleeve activity) may introduce more oxygen than the standard one or 2 Desiccant Stak-Paks can handle so additional Desiccant Stak-Paks are required. The Desiccant will need to be rejuvenated once every 3-5 days in an oven at 200° C for 2 hours. If condensation and water build up begin to form on the chamber walls, it is a sign the desiccant needs rejuvenation. The Desiccant should be replaced once a year.

4. RECIRCULATING ATMOSPHERE FILTER

The Atmosphere Filter consists of a filter housing, small vacuum pump and tubing. The atmosphere is circulated through the pump then through the filter and back into the chamber. This removes 99.9% of airborne contamination with a size of 0.3 micron or larger. The pump cycles 30 cu. ft. per hour. Depending on the contamination present, you may have to run the filter 2-3 times a week or just a few times a month.

5. GAS INJECTION SYSTEM

Consisting of solenoid valve and 2 timers, the Gas Injection System is designed to maintain a constant level of hydrogen gas mix in your anaerobic system. The timers allow the user to fully adjust how often the gas mix (H2 4%) is purged into the system and for how long. As each anaerobic chamber has different usage levels, this item allows for those adjustments.

6. ARM PORT PLUGS

4.0 THEORY OF DESIGN

4.1 PALLADIUM CATALYST/GAS REACTION

4.1.1 The following is an explanation of how the catalyst and gases react to remove oxygen so an anaerobic condition may be retained.

4.1.2 The catalyst is constructed of alumina and coated with a thin layer of palladium chloride. The main purpose of the catalyst is to provide a meeting ground for oxygen and hydrogen. Water is formed when oxygen and hydrogen meet in the presence of palladium chloride. The alumina in the catalyst absorbs the water which is driven off during catalyst rejuvenation.

4.1.3 During normal operation, oxygen continuously enters the Chamber by diffusion and other means. Without the presence of hydrogen, the catalyst will not remove oxygen. Hydrogen, unfortunately, cannot enter the chamber by itself; you must introduce it into the chamber.

Using the airlock daily allows hydrogen from the gas mix to enter the chamber when you open the inside door. The COY Gas Injection System is another convenient way to introduce H2 to the glove box automatically. Contact COY or your local COY Representative regarding this option.

Depending on how often you use the Chamber, both methods help to ensure the chamber has hydrogen. However, hydrogen concentration in your chamber will be diluted depending upon the volume of your Chamber.

4.1.4 Heat is generated by the catalyst when an abundance of oxygen and hydrogen combine. This is apparent when the chamber is initially purged. If the correct guidelines are followed when you purge the chamber, the catalyst will only feel warm to the touch.

If the catalyst becomes extremely hot or glowing red, purge the chamber with the background gas immediately.

4.2 OXYGEN ENTERING THROUGH AIRLOCK

4.2.1 Regardless of how many times the airlock is cycled, there will always be a small amount of oxygen entering the chamber. Removing oxygen is the catalyst's job. This amount differs, depending on the volumetric size of your chamber.

4.2.2 When the airlock's inside door is opened, the gases from the airlock will start to mix with gases in the chamber. Coy has found that gases from the airlock flow out of the airlock and across the chamber floor. If oxygen is present in the gases, it will flow across the chamber floor until it reaches the catalyst, at which time it will be removed (providing you have fresh catalyst and hydrogen present). Because the oxygen concentration is higher in the airlock than in the Chamber, an oxygen gradient is created. Oxygen levels are greatest at the airlock door and become progressively less as the distance from the door increases.

4.3 CONTROLLING MOISTURE

4.3.1 MOISTURE ENTERING THE CHAMBER

Moisture can enter the chamber in several ways:

1. GAS SUPPLY TANKS (NITROGEN/GAS MIX)
2. AMBIENT MOISTURE IN THE AIRLOCK
3. MOISTURE PRODUCING MATERIAL IN THE CHAMBER
4. MIGRATION THROUGH THE CHAMBER WALLS
5. HUMIDITY CAUSED BY BEING LOCATED IMMEDIATELY BELOW AN AIR CONDITIONING UNIT

4.3.2 CONTROLLING MOISTURE

Moisture may be controlled in the chamber using alumina desiccant. For the best control, provide as much desiccant surface area as possible to the chambers atmosphere. Placing desiccant horizontally on a catalyst box does not meet this requirement since airflow is restricted. The Stak-Pak may be placed on their edge, vertically in the catalyst box.

The Stak-Pak is designed to allow up to 6 units to be stacked in the vertical position (see Figure #9). Mounting the Stak-Pak vertically allows the catalyst box to expose the maximum amount of chamber atmosphere to the desiccant, while minimizing airflow restriction. The use of Stak-Paks can be extended to palladium catalyst or a combination of each (catalyst and desiccant). Coy has found that moisture can be controlled to less than 20% for 3 days in a type 6 ft. glove box, with 2 catalyst boxes, using 6 Stak-Paks (3 in each catalyst box) containing alumina desiccant. With 2 sets of Stak-paks, moisture can be continuously controlled. As the desiccant absorbs moisture, its pores become saturated with water vapor and must be rejuvenated. Alumina desiccant contained in Stak-Paks can be rejuvenated at 125-200 deg. Celsius for 2 hours. See Figure #9 (page 17) for details on mounting multiple Stak-Paks.

Figure #9 3 or more Stak-Paks mounted on a Fan Box

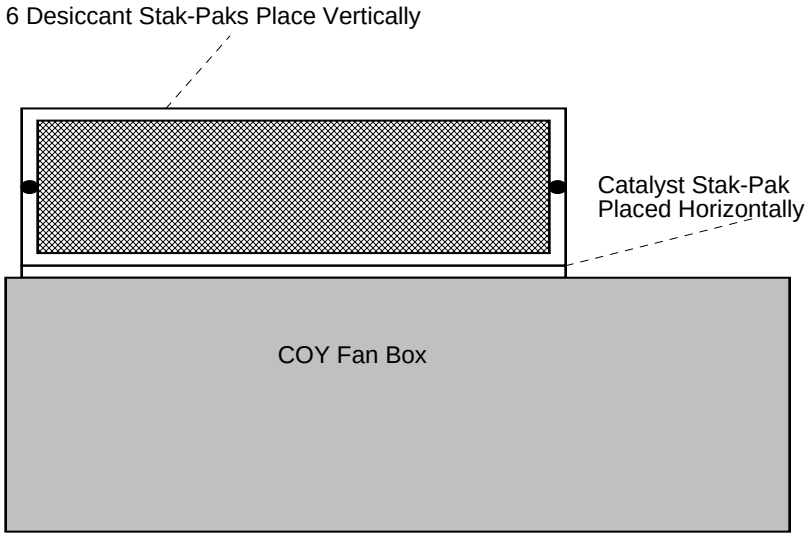

5.0 CARE AND MAINTENANCE

5.1 CARE OF POLYCARBONATE VIEWING SCREEN

5.1.1 PRECAUTIONS

There are several precautions you can take to prolong the life of your chamber. Precautions you should carefully follow are:

1. DO NOT USE ABRASIVE CLEANERS AT ANY TIME.

2. DO NOT USE ANY SOLVENT LIKE LIQUIDS TO CLEAN THE PLASTIC. ISOPROPYL ALCOHOL IS ACCEPTABLE.

3. KEEP EQUIPMENT AND SHELVING UNITS WITHIN EASY REACH SO YOU DO NOT STRETCH THE CHAMBER SLEEVES.

4. RINGS AND JEWELRY SHOULD BE REMOVED PRIOR TO USING SO AS NOT SCRATCH THE POLYCARBONATE OR TEAR THE NEOPRENE SLEEVES.

5. PROTECT THE CHAMBER FROM ORGANIC SOLVENT FUMES AND NEARBY PAINTING AND PLASTERING. IF SPLASHED, WIPE IMMEDIATELY WHILE WET WITH A SOFT CLOTH.

5.1.2 CLEANING THE POLYCARBONATE

Dust and clean with a soft cloth or chamois having first sprayed on a plastic cleaner. (COY part no. 1600-480)

The use of a mild soap or detergent and plenty of water also works well. Dry with a soft cloth or chamois.

Minor scratches can be removed by hand polishing. Polishes are best applied with a soft cloth dampened with water first. Several applications may be necessary, but most minor scratches can be reduced and the clarity improved in a short time.

5.2 CARE OF GLOVES

Installing Replacement Gloves:

Use Figure #10 as a reference
To replace a sleeve, be sure the Arm Port Plugs are in place. Remove the stainless steel band, and blue rubber gasket holding the Sleeve to the Arm Port, and remove the Sleeve.

Stretch the New Sleeve over the arm port opening so that the rolled edge of the sleeve is between the groove and the chamber wall. Make sure the glove is positioned correctly inside the glove box. Install the blue rubber gasket, and stainless steel band over the sleeve and in the groove. Be sure the blue rubber gasket is properly placed to protect the Sleeve from being cut by the stainless steel band. The new Sleeve is ready to use.

The arm length gloves are made of neoprene rubber and are susceptible to punctures and tears. Wear cotton gloves when working with sharp objects. Remove jewelry, and keep fingernails trimmed. If a hole is punctured in the sleeve, it must be replaced.

Replacement Gloves may be purchased from COY Laboratory Products.

Figure #10 Gloveless Sleeve Replacement

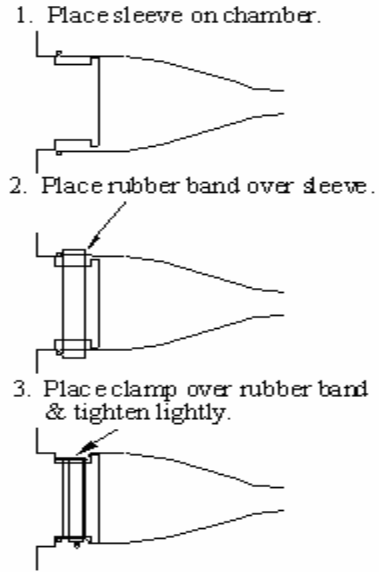

5.5 ANSWERS TO QUESTIONS FREQUENTLY ASKED ABOUT THE ANAEROBIC CHAMBER

This section answers the most frequently asked questions. Additional questions may be directed to the factory.

Q. 1. HOW MUCH GAS CAN I ANTICIPATE USING WHEN I OPERATE THE CHAMBER ON A ROUTINE BASIS?

A To purge the airlock for each use will require approximately 3 cu. ft. of gas mix. The initial set up of the Chamber will require approximately 50 cu. ft. Thereafter, the chamber will use approximately 10 cu. ft. per week to maintain the proper environment.

Q. 2. HOW OFTEN, AT WHAT TEMPERATURE, AND FOR HOW LONG DO I REJUVENATE MY CATALYST?

A. Rejuvenating the Catalyst is very important in keeping the Chamber in an anaerobic condition. Rejuvenating the Catalyst a minimum of once a week at 125-200° C for two hours is recommended. Included in the Chamber package are 2 sets of Catalyst Stak-Pak. Replace the Catalyst you rejuvenate with the extra set. Then your Chamber will always have fresh Catalyst. If you have an extremely busy glove box, you may need to rejuvenate the catalyst more frequently, even on a daily basis.

Q. 3. WHY DOES MY CHAMBER LOSE ITS ANAEROBIC CONDITION OVER A PERIOD OF TIME?

A. There are a couple of variables that must be considered to answer this question. First, does your Chamber have a leak? Second, is the catalyst fresh, has it been rejuvenated? Once these variables have been considered and eliminated from the probable cause, concentrate on the hydrogen content in the Chamber. Deficient hydrogen content is usually the cause for losing anaerobic conditions in the Chamber. Oxygen is constantly entering the Chamber by Airlock use and diffusion through the gloves. Without the hydrogen, the catalyst cannot react to remove the oxygen.

You must keep in mind the dilution factor when the gas mix enters the Chamber. If you are using a 5% hydrogen gas mix your Chamber will not contain 4% hydrogen. It will be diluted to approximately 3.5% hydrogen. Coy Labs Oxygen/Hydrogen Analyzer can be used to display the amount of hydrogen in percent that is present in your Chamber. Also, the Analyzer has an alarm that indicates when the hydrogen content goes below 1%. If you have exhausted every probable cause and your Chamber still loses its anaerobic condition, test your gas mix for hydrogen content. We have seen and heard of gas companies that do not comply with customer specifications.

Q. 4. HOW DO I KNOW MY CATALYST IS WORKING AND HOW OFTEN SHOULD I REPLACE IT?

A. A good test to determine if your catalyst is working is to place a tray containing catalyst inside the Airlock. Place a thermometer in direct contact with the catalyst. Then purge the Airlock (manual or automatic) with gas mix containing hydrogen. If the catalyst is working correctly, the temperature will increase due to the reaction of catalyst, oxygen, and hydrogen. Temperature will increase about 10 degrees Celsius over 10 to 15 minutes.

Coy recommends catalyst replacement on a yearly basis or if the catalyst does not respond to the above test.

Q. 5. WHERE DO MOST LEAKS OCCUR IN THE ANAEROBIC CHAMBER?

A. Leaks can occur anywhere in the Chamber but most will be present around work areas. Before you begin leak detection, you must first make sure the Chamber contains your normal amount of pre-mixed gas. A towel saturated with isopropyl alcohol, and allowed to sit in the Chamber for a few minutes, will assist in detecting the very small (slow) leaks. With your gas leak detector, check the following areas first:

1. GLOVES/SLEEVES
2. ALONG CHAMBER SLEEVES
3. AROUND AIRLOCK SEALS
4. AROUND LARGE DOOR SEALS.

Don't be alarmed if the beeping tone increase slightly around your neoprene rubber gloves. Neoprene rubber has a large pore structure and so will allow hydrogen to diffuse through. Around the gloves, lower the detector sensitivity since the diffusion will give the appearance of a leak.

Q. 6. WHAT WILL THE HYDROGEN SULFIDE PRODUCED BY SULFUR BACTERIA DO TO THE CHAMBER AND HOW CAN I CONTROL IT?

A. It is important to control hydrogen sulfide in the Chamber because it attacks certain metals and can "poison" catalyst. Hydrogen sulfide is especially detrimental to the oxygen and hydrogen sensors in the Model 10 Gas Analyzer, and to printed circuit boards in other equipment. COY printed circuit boards are coated with a protective substance, but hydrogen sulfide will attack any exposed metal and will, with time, creep under the coating, thus attacking the metal on the boards. The time taken to affect the metal will depend on the concentration of hydrogen sulfide and the humidity level.

To control hydrogen sulfide within the chamber, use one of the following methods:

1. ACTIVATED CHARCOAL
2. LEAD ACETATE
3. SILVER CHLORIDE
4. SILVER SULFATE

For chemicals 2 through 4, the sulfur will bind with the metal forming an insoluble precipitate leaving acetic acid (2 & 3) or sulfuric acid (4) as the byproduct. The activated charcoal will adsorb the hydrogen sulfide molecule. However, we generally DO NOT recommend its use since the adsorption is not specific to hydrogen sulfide, but is general to most molecules in the Chamber. A specific procedure for the use of silver sulfate is as follows:

1. Bring 2 liters of distilled water to a boil.

2. Add 10g of silver sulfate (Ag_2O_4S) to the boiling water and allow it to dissolve. This will take 5-10 minutes.

3. After the solution has cooled to near room temperature, add 20 ml of 1 N-aqueous sulfuric acid ($H_2 So_4$). This will inhibit the formation of carbonates in the solution.

4. Add 2 liters of Glycerol (Glycerin) and mix the solution thoroughly.

   The glycerol will inhibit evaporation. The solution can be used in the Chamber by bubbling the atmosphere through it or by simply letting a beaker of it sit open in the Chamber. Add water to the vessel if necessary to maintain the initial volume.

   The silver sulfide formed is a black precipitate that serves as an indicator that your solution is removing Hydrogen Sulfide from the atmosphere. Over time you will learn what your vessel looks like when all of the silver sulfate has been converted to the precipitate. If you need to test the activity of your solution, you may use sodium sulfide. When put into an active solution, the black precipitate, silver sulfide, will form.

Q. 8. WHAT KIND OF DISINFECTANT CAN I USE IN MY CHAMBER?

A. With proper care, Isopropyl Alcohol (I.P.A.) or a 1%-2% Clorox solution may be used. Make sure that the substance used is completely wiped off the Polycarbonate portions of the glove box because if allowed to sit on the Polycarbonate for extended periods of time it will degrade the surface.