14500 Coy Drive, Grass Lake, Michigan 49240
734-475-2200  E-mail: sales@coylab.com
www.coylab.com

# Manual for Mechanical Conflict-Avoidance System

**(Harte, Morrow Method)**

Page left blank intentionally

# *Contents*

# *WARRANTY*

This Mechanical Conflict-Avoidance System for rats (MCS) is warranted against defects in material and workmanship during the first 12 months after original date of shipment. Disposable items and normal wear items are not covered by the warranty.

Coy will, at its option, repair or replace a defective item within the 12 month period at no charge for parts and labor. Customer shall hold and make available for inspection and testing by Coy all products or components claimed to be defective.

All returns or exchanges must first be authorized by COY LABORATORY PRODUCTS, INC.

PHONE: 734-475-2200
FAX: 734-475-1846

COY LABORATORY PRODUCTS, INC.
14500 COY DRIVE
GRASS LAKE, MI 49240
United States of America

The responsibility of COY LABORATORY PRODUCTS, INC. is limited to the purchase price of this product, and COY LABORATORY PRODUCTS, INC. will not be responsible for any consequential damages.

This warranty does not cover damage in shipment or damage as a result of improper use or maintenance of this product. This warranty does not cover damages caused by excessive line transients on the AC supply line.

# *WARNINGS*

1. **This system is a tool for research use with rodents and should not be utilized for any other purposes.**

2. **The gap below the doors must be maintained to prevent pinching of tails, enable perception of an outlet, and aid in airflow.**

3. **Do not excessively tighten the LED bulb; finger-tight is sufficient.**

4. **Use care when removing the LED bulb so that the outer shell is not broken leaving sharp edges and making it difficult to remove.**

5. **Do not power the unit on unless an LED bulb is installed.**

6. **Never attempt to service the Mechanical Conflict-Avoidance System. Call COY LABORATORY PRODUCTS, INC. for assistance.**

7. **Never insert anything other than the LED bulb into the light socket.**

8. **Do not place anything heavy on the probe bed or use animals larger than rats on the bed.**

9. **Use care when handling the probe bed to avoid damage to the precision probes or injury from mishandling.**

10. **Do not use abrasive cleanser as they may damage the surfaces. Use only cleaners that are compatible with the materials of construction.**

11. **Check all cleaners before use to ensure that they are compatible with the materials of construction.**

12. **Never immerse any portion of the light box, power cord, or switches as damage may result to the unit and there is the potential of electrical shock.**

13. **Acrylic is known to be somewhat brittle so it is important to not drop any parts of the system or use excessive force when handling the unit.**

14. **Use of input power other than 110V AC 60Hz may result in damage to the unit unless the optional transformer is attached.**

# *GENERAL DESCRIPTION*

A new approach to preclinical pain research has been identified as a need since current methods, most of which are based on reflex measures, have not yielded sufficient new pain treatments. The Mechanical Conflict-Avoidance System for rats (MCS) provides an operant method of pain testing with rodents that complements the reflexive methods as it utilizes the cognitive (including motivation and affective) component of pain that is largely lacking in the reflexive tests.

Rodents are placed in an end chamber of an alley divided into three chambers. The middle chamber has a perforated floor through which a height-adjustable array of nociceptive probes can be protruding. The animals make the choice to escape an aversive light in the original chamber by crossing the middle box to enter a preferred dark chamber at the opposite end of the alley. The array consists of tapered probes that are not sharp enough to cause any tissue damage when traversed by the rodent. These are analogues to noxious mechanical stimuli that rodents encounter in the wild. The red color of the alley is perceived by the rodents as being black/dark while allowing the researcher to observe the animal's behavioral/responses.

Using various pain models, studies can be done with such measured responses as number of complete crosses, time to exit the light chamber, time to cross the probe chamber, time spend on the probes, etc. Significant stimulus-response relationships can be examined between probe height and these measured responses. Spontaneous pain behaviors (e.g., guarding, paw licking, etc.) may also be observed and recorded. Responses can be measured before and after drug treatments.

# *ASSEMBLY INSTRUCTIONS*

For information on component parts, assembly, and use of the power cord/switch, see Appendix A at the end of this document. The assembly video on the CD or DVD included with the MCS provides an animated view of the assembly steps.

# *SPECIFICATIONS*

PHYSICAL and ELECTIRCAL SPECIFICATIONS

| | |
|---|---|
| Size of Footprint | 33.2” wide x 8.25”deep<br>(87.3 cm x 21 cm) |
| Overall dimensions | 32.2” wide x 8.25”deep x 17.75” high<br>(87.3 cm x 21 cm x 43.2 cm) |
| Weight | ~30 lbs (13.6 kg) (~45 lbs shipping weight) |
| Power Requirements | 24 watts<br>120V AC, 60 Hz<br>*(optional transformer available for use with 220V, 50 Hz)* |

FUNCTIONAL SPECIFICATIONS

| | |
|---|---|
| Increments of probe height adjustment | 0.5, 1, 2, 3, 4, 5 mm |
| Accuracy of probe height above probe base | +/- 0.5 mm across the entire array when unit on a flat surface and all components are clean and undamaged |
| Light Output (Average) | 500-600 foot-candles (ft-c) at the bottom of the light box |
| Light Type | LED (to minimize heat output) |
| Light Intensity Meter<br>(wavelength ~490nm – 690nm meeting C.I.E. photopic) | included (NIST traceable +/- 5% full scale + 4 ft-c with scales of 0-199.9 & 200-1,999 ft-c) |
| Remote Toggle switch on power cord for light | Included |
| Probe Array | Positioned evenly (~1cm) in any direction so that at least one or more paws will contact the probes while traversing the probe chamber |

MATERIALS OF CONSTURCTION

| | |
|---|---|
| Plastic portions of Runway, Doors, Probe Base, Light Box, and Covers that are red or black | Acrylic |
| Plastic portions of Main Base, Runway, Probe Base, and Covers that are clear | Acrylic and Polycarbonate |
| Probe Bed | Stainless Steel probes in Aluminum plate |
| Probe Height Wheels | Aluminum |
| Catches on Doors | Magnets (ferrous metal) |
| Slides on Doors | Polyethylene |
| Light Box Feet | Polyethylene |
| Adhesives | None exposed on a surface.<br>*(Only adhesives used are captured under protective pads on light box and labels.)* |
| Translucent portion of LED bulb | Frosted Glass |
| Exposed Hardware | Stainless Steel |

# *OPERATION*

## *General Overview*

The basic premise of the MCS takes advantage of the normal photophobia (aversion to light) of the rodent. While the animal is in what is perceived by them to be a dark box (red in color so researcher can make observations), a bright light is applied and they decide if they will escape that light to a "safe" dark box by crossing an area that in addition to some light may have a noxious stimulus (extended probes).

Responses such as time to exit the light box, time to cross the probes, time on the probes, successful crosses, etc. can be measured. Stimulus response relationships to variables such as probe height can be evaluated. Differential responses with different pain models and/or treatments can be evaluated to better understand the mechanisms of pain and the possible effect of the treatments.

**The video included on the CD or DVD with the MCS provides actual images of the MCS in use**. It is highly recommended that you view this video as the detail it includes is not provided in text form since it would be nearly impossible to do so in a useful manner.

Unlike reflex-based assays, training is <u>required</u> to obtain meaningful results in the MCS. **Detailed instructions regarding training and key information for developing your protocols is included in the Appendix B**.

**How to install and adjust the height of the probe bed:**

1. insert the probed bed into the probe base and have it resting on the vertical bars under the perforations
2. lift the probe bed in the middle by placing you hand directly under the bed and aligning the probes with the perforations
3. using the other hand, insert the probe height wheels under the far right and far left sides of the probe bed. Rotate each wheel so that the desired height is seen at the top of the wheel.
4. lower the probe bed onto the height wheels
5. to change the height repeat steps 3 and 4. It is possible to simple rotate the height wheels; however, the sound generated will likely cause the rodents to startle. It is preferred to change probe height when animals are not in the device.

## *Important Procedural Tips*

1. **Sufficient training is critical to testing success**. Ensure there is sufficient repetition, time allowed in the initial familiarization runs for exploration, and time allowed in the dark at the beginning and end of each run to avoid association with the stressful event of being handled. Detailed information is in the "MCS Training" Section of Appendix B "Detailed Method Guide for the MCS".

2. The MCS must be **used on a flat surface** to maintain the accuracy and uniformity of the probe height above the probe base.

3. Position the MCS **in the same location** of the lab for each use (especially for replicates) so that the ambient light entering the probe chamber is constant. Measure and record this light level using the light meter included with the MCS

4. The **light box MUST be installed on the chamber of the runway with the clear support** and NOT the archway. It has been found that the archway affects the response of some animals to the light.

5. **Use the toggle switch on the power cord to turn the light on and off** making it easier to simultaneously start the timer and avoid noise or motion that may startle the rodent.

6. During experiments:
    a. **Do not look at the rats thru the top of the lid of the probe chamber** (especially if a clear lid is used which is typical). The sight of you elicits a response in the animal that alters the results of the experiment. The proper viewing angle is thru the side of the runway as the rodents can not see through the red plastic.
    b. **Do not talk or allow any extraneous noise in the room** as this will potentially startle and/or distract the rodents and affect their behavior

7. It has been found that **leaving the "rodent smell" in the MCS is advantageous** thus the only required cleaning is to brush or blow away any loose bedding, hair, etc. and to remove the occasional urine or feces followed by a water wipe. Reverse the assembly instructions in Appendix A to disassemble the unit for cleaning if needed.
    a. Should more extensive cleaning be desired, use cleaners compatible with the materials of construction listed in the "Specifications" section of this manual. Consider using:
        i. a gentle cleanser without bleach, ammonia, or abrasives
        ii. a 1:10 diluted solution of fragrance free dish detergent
    b. Be sure to rinse well after use of any cleaners.

# *MAINTENANCE and REPAIR*

## *Replacing Door Slides*

The slides on the doors should be replaced if they have become gouged or worn so that the doors no longer move easily and quietly.

1. Remove the slides from the door being careful not to damage the acrylic (do not use any sharp objects). The slides should come off fairly easily. If needed, use something to pry the slides of on the edge of the door.

*or*

*and pull off the slider*

2. Press the new slide onto the door. It is easiest to do this by angling the slide and starting at the bottom of the door. It is important to have the slide line up with the bottom of the door.

*and line up slide with the bottom of the door*

## *Changing Fuse for LED*

The LED (Light Emitting Diode) bulb will have a very long life. If the light stops working, first verify that the cord is securely plugged in at both ends and that the switch is on. If the light is still not working, then unplug the cord and replace the fuse. There is a spare fuse (5mm x 20mm, 0.2A) kept in the fuse holder on the light box. To replace the fuse simply open the cover of the fuse holder with your fingernail and swap the used fuse for the new one then place the cover back onto the fuse holder.

# *REPLACEMENT PARTS AND OPTIONS*

| *Part Number* | *Description* |
|---|---|
| 8700020 | LED Light Bulb |
| 8700600 | Power Cord with Switch |
| 8600040 | Light Meter |
| 8701000 | Probe Height Wheel |
| 8700400 | Doors with magnetic catch (red) |
| 8700700 | Large Cover (clear) |
| 8700900 | Small Cover (clear) |
| 8700800 | Small Cover (red) |
| 8700050 | Door Slide Set (Qty 4) |
| 1200870 | CD/DVD with Manual and Video |
| Contact Coy with MCS Serial # | Probe Bed |
| Contact Coy with MCS Serial # | Light Box |
| **Options** | |
| 8702100 | Large Cover (red) |
| 8702300 | Transformer for Operation with 220V AC 50 Hz input |
| **Full System** | |
| 8700000 | Mechanical Conflict-Avoidance System |

## For Technical Service Contact:

Coy Laboratory Products, Inc.
Technical Service Department
14500 Coy Drive
Grass Lake, MI 49240
(734) 475-2200 phone
(734) 475-1846 fax
TechService@coylab.com

# APPENDIX A
Assembly Instructions

# Mechanical Conflict-Avoidance System

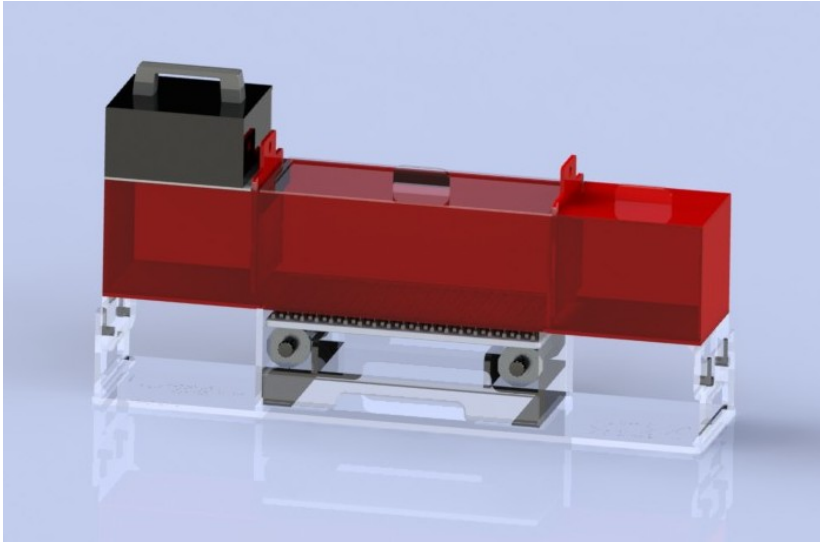

# Assembly Instructions

14500 Coy Drive » Grass Lake, MI 49240 » 734.475.2200 » email: techservice@coylab.com » www.coylab.com

# Components

| ITEM | DESCRIPTION | QTY. |
|---|---|---|
| 1 | Main Base | 1 |
| 2 | Probe Base | 1 |
| 3 | Runway | 1 |
| 4 | Door | 2 |
| 5 | Light Box | 1 |
| 6 | Cover, Clear, Large | 1 |
| 7 | Cover, Red, Small | 1 |
| 8 | Probe Height Wheel | 2 |
| 9 | Probe Bed | 1 |
| 10 | Cover, Clear, Small | 1 |
| 11 | Power Cord | 1 |
| 12 | Light Meter (Not Shown) | 1 |
| 13 | LED Light Bulb (Not Shown) | 1 |
| 14 | Manual and CD (Not Shown) | 1 |

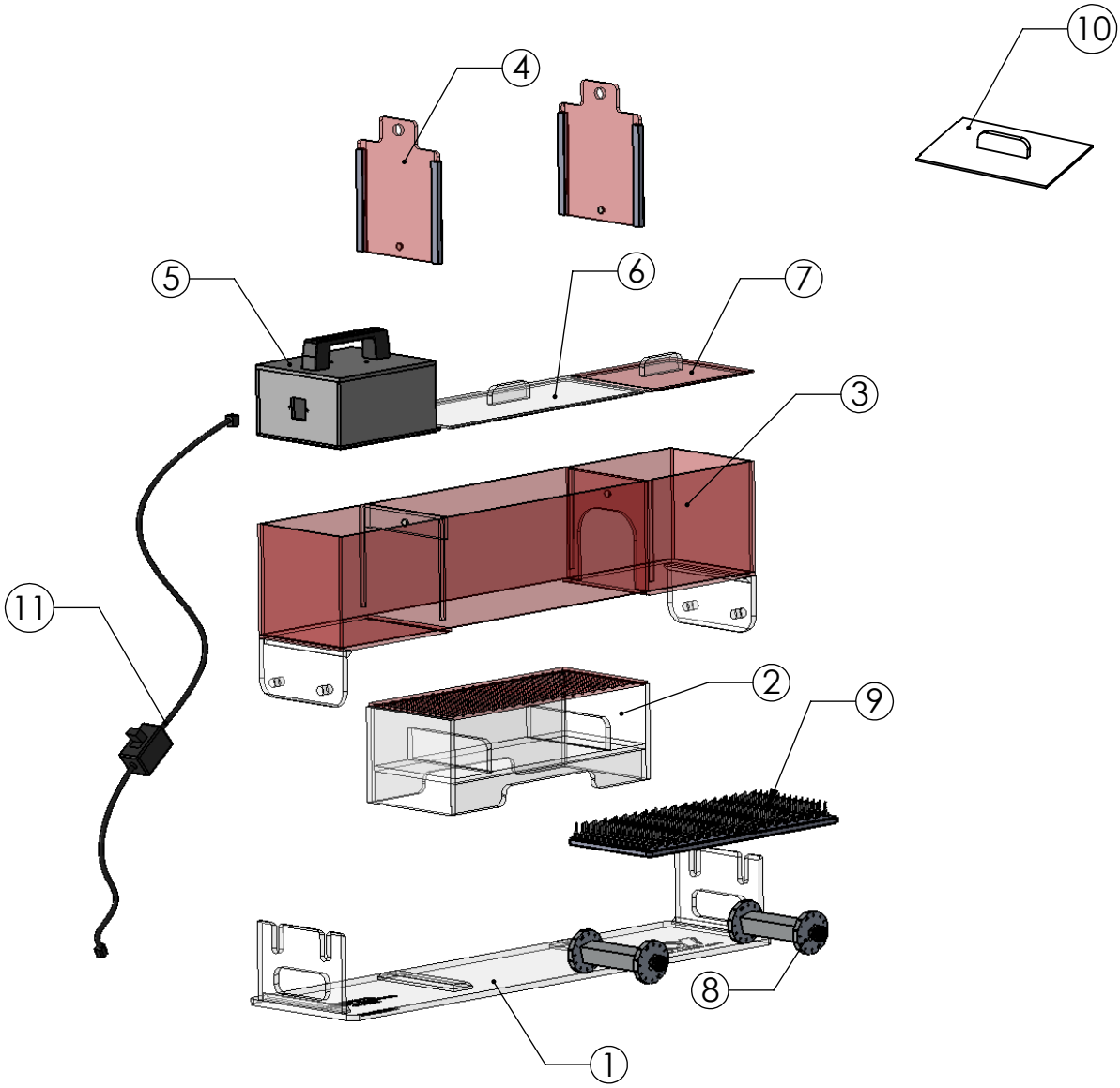

# ASSEMBLY SEQUENCE (assembly video included on CD or DVD)

①

**Note: ASSEMBLE AND OPERATE ON A FLAT SURFACE.**

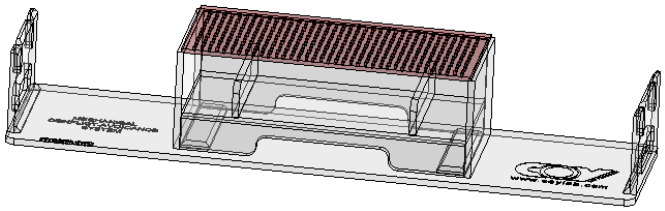

Place Probe Base onto Main Base
- Open side of Probe Base faces user

②

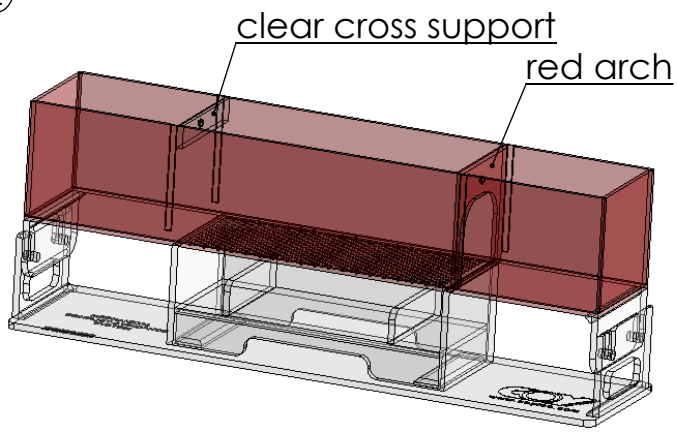


Place Runway onto Main Base
- Side w/ clear cross support (not red arch) needs to be on light box side

③

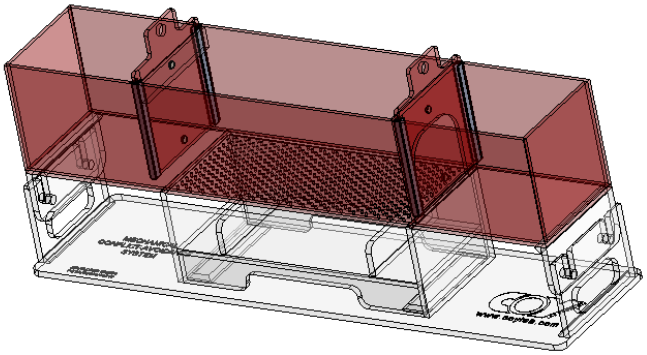

Insert 2 Doors
- Magnets in doors need to face magnets in arch or cross support

④ Screw light bulb into Bottom of Light Box

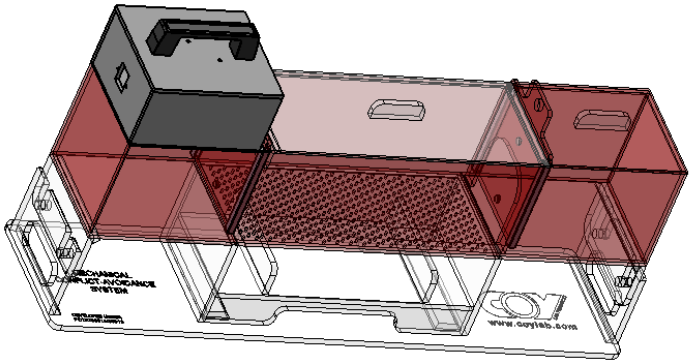

Place Light Box, Large Cover and Small Cover on Runway
- Place light box on side with clear cross support = light chamber (not red arch)

⑤

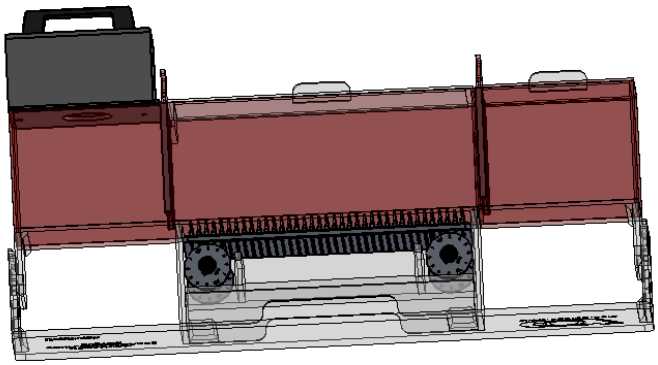

1. Side Probe Bed into Probe Base
2. Align Probes to holes in Probe Base
3. Raise Probe Bed from center
4. Insert both Probe Height Wheels
5. Lower Probe Bed onto Height Wheels

⑥

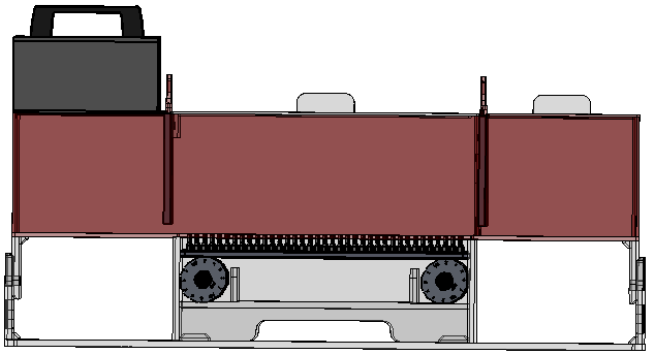

To set or adjust Probe Height:
1. Lift Probe Bed off Height Wheel
2. Turn Probe Height Wheel so desired setting is read at the contact points (top and bottom) of the Wheel
3. Lower Probe Bed onto Height Wheel

# Power Cord
# Installation and Instructions

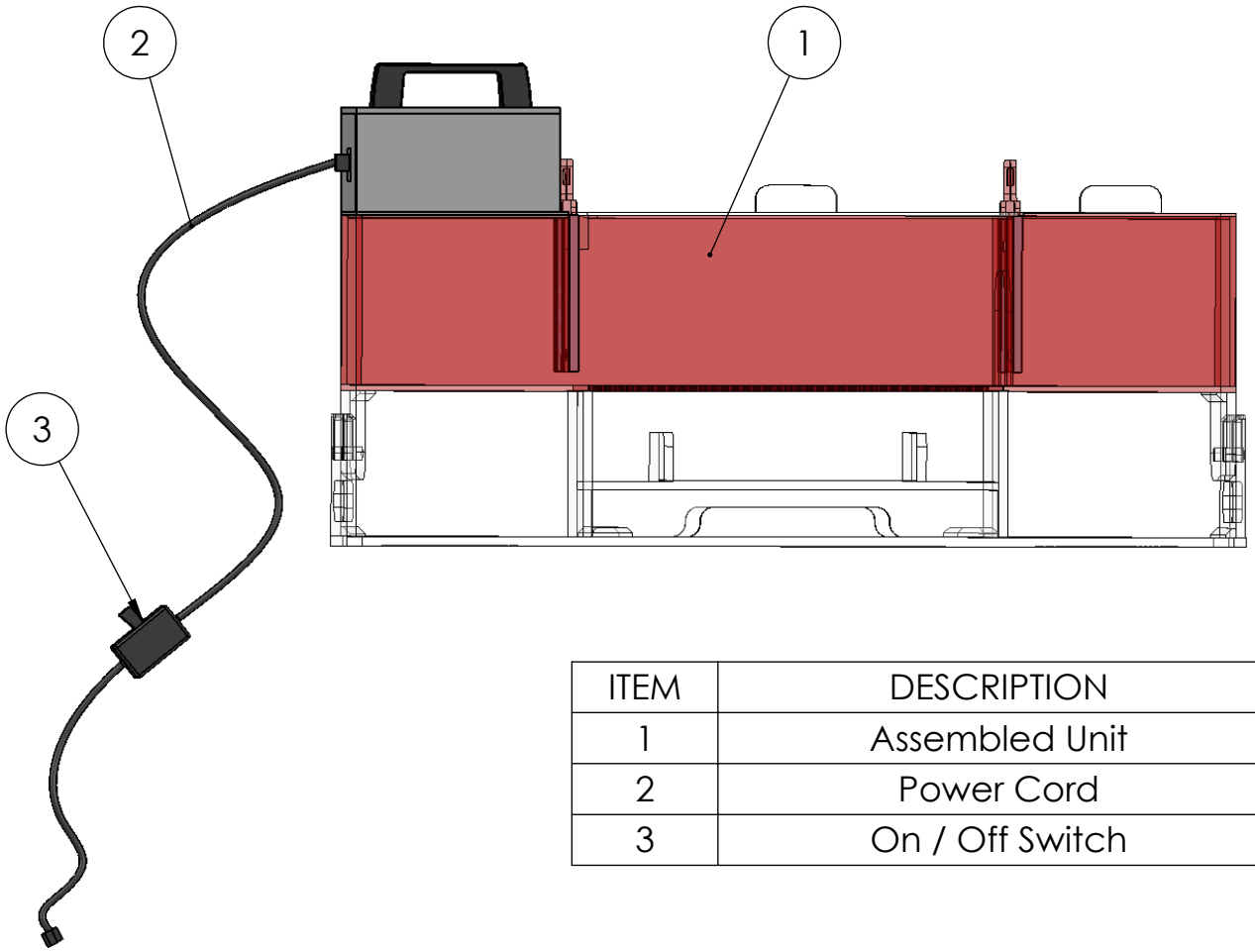


| ITEM | DESCRIPTION |
|---|---|
| 1 | Assembled Unit |
| 2 | Power Cord |
| 3 | On / Off Switch |

1. Plug female end of Power Cord into back of Light Box
2. Plug male end of Power Cord into power supply
3. Turn on Power Cord Switch

Notes:

To minimize Sound Stimulus the light is turned ON/OFF by using the Power Cord switch.

The MCS is designed for 120 V input power.

Use the optional transformer if your power supply is 220 V.
This option is availible through Coy Lab Products.

Revision Date: 08/14/12

# APPENDIX B

Detailed Method Guide for the Coy Mechanical Conflict-Avoidance System
(Harte, Morrow Method)

# Detailed Method Guide for the Coy Mechanical Conflict-Avoidance System for rats (MCS)

## (Harte, Morrow Method)

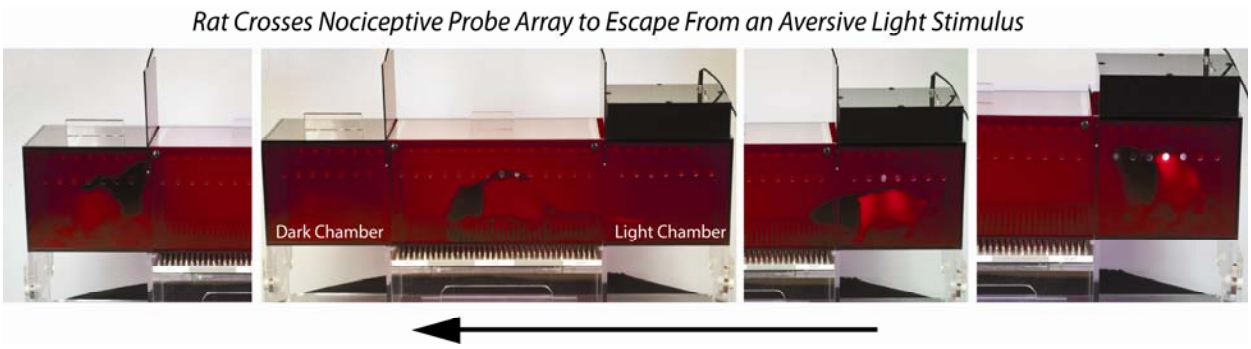

## Overview

The MCS is a fast and reliable method to assess complex pain behaviors in the rodent. During training, rodents are first placed into a closed chamber illuminated with bright light. After a delay, the chamber door is opened and the rodent can escape the light and take refuge in a dark chamber located on the opposite side of the device. This escape behavior is readily learned as it leverages the rodent's innate aversion to light (photophobia) and preference toward dark enclosed spaces. Over time rodents demonstrate the aversion to the light chamber by spending the majority of their time in the dark chamber. In contrast to other operant pain tests, escape behavior in the MCS is motivated not by a noxious stimulation, but instead by a non-noxious aversive stimulus: bright light. Other iterations of the MCS could motivate behavior by other means, including food or drug incentives located in the opposite chamber. Discuss these ideas with the manufacturer, Coy Laboratory Products, Inc., as they are interested in developing new versions of the MCS or other novel devices for pain assessment or behavioral studies.

Following training, this escape behavior is challenged or suppressed by a series of pointed nociceptive probes that impede the route from the light chamber to the dark chamber. The probes are used here as analogues to the noxious mechanical stimuli that rodents encounter in the wild, including claws, teeth, thorns, spines, and rocky terrain. Nevertheless, other modalities of noxious stimuli (hot/cold plate, electrical grid) could be used to hinder light escape. The presence of the probes elicits a cognitive "conflict," in that the rodent now must choose between two courses of action (or inaction) that differ in degree of unpleasantness: namely, to stay in the light or cross the probes to reach the darkness. Resolution of this conflict is hypothesized to require a cost-benefit analysis that depends on the level of the rodent's ongoing pain, the height of the probes, and the aversiveness of the light. For animals with no or mild ongoing pain, the evoked noxious stimulation of crossing the probes may be worth the "reward" of darkness, whereas animals in severe pain may decide that the "cost" of crossing the probes is too high and thus remain in the light. During the decision making process, rats will typically engage in stretch-approach behavior as they examine the probes. After this examination, most rats will cross the probes and enter the dark chamber, others will exit the light chamber but then return to the light (failed cross), while still others will refuse to exit the light chamber at all. In some instances, spontaneous pain behaviors, such as guarding of an injured paw, may be elicited simply by seeing the probes. In general, as ongoing pain intensity and/or probe height increases, animals require more time to exit the light chamber. Latency to exit the light chamber (defined as time from light being turned on to having all 4 paws on the probe bed) before a successful cross and frequency of successful crosses have both been shown to be stimulus-dependent measures in the MCS.

This manual includes detailed methods for using the MCS based on previous studies at the University of Michigan by Drs. Steven Harte and Thomas Morrow, inventors of the MCS. It provides a starting point for both replication and novel experimentation.

## General Methods

### 1. *Required Materials*

- MCS with included supplies (light meter, height adjusters, power cord, etc.)
- 2 stopwatches or timers with split function (silent operation preferable)
- MCS Data collection sheet (example provided on CD or DVD with MCS)

### 2. *Animals and Housing*

Male Sprague-Dawley rats (Harlan, Indianapolis, IN, USA), shipped at 275-300 grams, are housed as groups of 2-3 in filter-top polycarbonate cages in a climate-controlled vivarium maintained on an alternating 12-hour light/dark cycle (lights on at 7 AM). Vivarium cage racks are equipped with automated water dispensers and forced ventilation. The top of the rack is enclosed to prevent direct room lighting from entering the cages. This important feature helps maintain rats' innate photophobia. It is strongly recommended that rats are not housed in areas of direct bright lighting.

Home cages are filled with Sani-Chips (P.J. Murphy Forest Products, Montville, NJ, USA) to a depth of 1 inch and contain a red polycarbonate box with openings on both sides for enrichment (since the animals perceive red as black this provides a dark place for them to hide). Water and food (Purina 5001 Rodent Chow or Harlan 2016 Rodent Diet) is provided *ad libitum*. Animals are given one week to acclimate to the facility after arrival without experimenter contact. Before data collection, rats are handled on 3 separate days for 10 min. Rats undergo room acclimation for 30-60 min before the start of testing on each experiment day.

### 3. *Testing Environment*

The behavioral testing room is maintained at approximately 72.5 degrees Fahrenheit and normal humidity (30-50% RH). Artificial room illumination is provided by ceiling mounted fluorescent fixtures that generate 115 FC (foot-candles) at work level. Natural light is blocked by window blinds. Research personnel are not permitted to wear perfumes or fragranced cosmetics. Nitrile exam gloves are worn during animal handling. Foot traffic and talking is avoided during testing to reduce distractions. No other behavioral tests are conducted during MCS operation.

### 4. *MCS*

To ensure the proper accuracy of the probe heights, the MCS must sit on a flat, clean, hard surface and all of its components must be undamaged, free of debris, and assembled correctly.

The MCS is positioned in the exact same location of the room during all tests to maintain consistent ambient lighting within the non-lighted chambers (approximate brightness levels measures with the MCS light on: Probe chamber (middle) = 60 FC; Dark Chamber = 6 FC). <u>Note:</u> Measure and record the light level in the light chamber not only for the experimental record but also to monitor light level for any decline which should only be the result of a dirty bulb since the bulb is designed to maintain illumination levels during its lifetime.

Contrary to what might be considered common practice, the MCS is not cleaned between animals, trials, or testing days with the exception of removing feces and urine. Wet stool and urine are wiped immediately after each "trial" (defined as anytime a rat is placed in the MCS whether they cross, attempt to cross, or sit in the light chamber) with paper towel and cleaned with tap water if necessary. Loose bedding is vacuumed or swept out the MCS at the end of test day. Although the MCS is designed to be fully dissembled for cleaning, our experience is that task performance is improved when the device is well permeated with the odor of conspecifics.

## *5. Terminology*

- Trial = anytime a rat is placed in the MCS whether they cross, attempt to cross, or just sit in the light chamber
- Session = a set of trials. Typically 1 trial with no probes followed by 3 trials at a set probe height (the probe height does not change between these 3 trials). The time between each trial is at least 10 minutes and all trials are performed on the same day.
- Exposure = refers to any contact with the probes as opposed to the runs without probes (0 mm probe height)

## A. MCS Training

### *1. Configuring the MCS*

The following parameters are used on all training days prior to each trial:

- light chamber door closed
- dark chamber door open
- light is off using the inline toggle switch on the power cord
- probe bed is inserted but not elevated on the height adjusters

### *2. MCS Familiarization - Day One*

***2.1.*** Rat is placed in the light chamber with lights off. The first stopwatch is started. After 10-15 seconds of darkness, the light is turned on (using the inline toggle switch) for 20 seconds after which the light chamber door is quickly opened. Rat freely explores the entire MCS for 5 min before being returned to his home cage.

*<u>Note:</u> The light chamber door should be opened by an operator situated behind or to the side of the MCS so as not to be visible to the rat as it attempts to exit the light chamber. Objects appearing in the upper visual field of the rat are interpreted as predatory and may cause the rat not exit or immediately return to the light chamber. This is most critical when the clear top is used for the probe chamber. Additionally, door manipulations should be done so there is no sound or jarring that produces a startled response in the rats. If you find that you are not able to do this or it is very difficult, consult with Coy Laboratory Products.*

***2.2.*** By the end of 5 min the rat should begin to display a preference for the dark chamber. Rats that fail to display a dark preference should repeat this procedure after a minimum rest of 20 minutes (typically after the remainder of animals has undergone the familiarization procedure). This completes Day One.

### *3. MCS Familiarization - Day Two*

***3.1.*** Repeat MCS familiarization procedure performed on Day One.

***3.2.*** Rats that show no preference for the dark chamber following all 4 possible familiarization runs (Days One and Two) are typically excluded from further training and testing. Successful performance in the MCS requires that animals exhibit an aversion to light and preference for dark. Animals failing to demonstrate these innate characteristics are unlikely to perform well in this task. On average, 10% of rats per cohort are excluded as non-responders.

*<u>Note:</u> Previous experience suggests that all rats, even those that do not initially demonstrate crossing behavior, will learn this task with continued training. It is the discretion of the investigator whether sufficient time is available to continue training these animals beyond this time point.*

4. ***Training Days Three, Four, and Five***

**4.1.** Rat is placed in the light chamber with lights off. Start first stopwatch. After 10-15 seconds of darkness, the light is turned on (using the inline toggle switch) for 20 seconds after which the light chamber door is quickly opened. With the door opening, simultaneously start the second stopwatch. Rat is given 30 seconds (time can be adjusted) to exit the light chamber. Failure to exit in 30 seconds results in light chamber door being closed and returning the rat to its home cage.

**4.2.** Exit from the light chamber is considered to have occurred when all 4 paws are outside the light chamber. Animals may stretch their bodies into the probe chamber before exiting although this is not considered an exit. When the animal exits, the spilt is hit on the second stopwatch. This records the **latency to exit the light chamber** (out of a maximum of 30 seconds).

**4.3.** Dark entry occurs when all four paws are in the dark chamber and no longer in the probe chamber. Immediately after the animal enters the dark chamber, the dark chamber door is closed and the second stopwatch is stopped. (Note: Some have found it advantageous to leave the door of the dark box open for all testing as some animals have exhibited a reluctance to enter the dark box after the door has been closed behind them even once) The difference between time of light exit and the time to enter the dark chamber is recorded as transit **duration.**

**4.4.** After 20 seconds of darkness (reward), the lid of the dark chamber is removed. After a 5 second pause, the animal is gently removed from the dark chamber and returned to its home cage. <u>Note:</u> It is important that animals do not associate the dark chamber with the stressful experience of being lifted. Therefore, the pause between opening the dark chamber lid and handling the animal should not be omitted. Also, some have found it advantageous to increase the time to 30 seconds.

**4.5.** The procedure is repeated **3 times** on each day with a minimum interval of 10 minutes between runs (trials) from which mean latency to exit and transit duration is calculated.

5. ***Alternative Outcomes***

**5.1.** *Exit without Dark Entry.* In this scenario, the rat exits light chamber but remains in probe chamber without entering the dark chamber. Rats that fail to make a dark entry and continue to linger in the probe chamber are removed from the MCS after 60 seconds following light exit. The rats can be tested again following the other animals. This outcome is rare in well-trained animals.

**5.2.** *Exit with Light Re*-Entry. Some animals will exit the light chamber and then return. In this case, the door of the light chamber is closed and the rat is immediately returned to its' home cage. Latency to exit and duration are still recorded; however, failure to enter the dark chamber is noted so that the data can be appropriately evaluated.

*Note: If a rat is moving between chambers at 60 sec, allow them to complete the movement into the chamber and record the time and situation. On the rare event that at 60 seconds the rat*

*stays between the chambers for a prolonged period of time, record this event and remove the rat by the least stressful method.*

### *6. Training Criteria*

Training animals to perform an operant task well requires patience and flexibility. Although most rats in our experience learn the MCS crossing task within the 5 day training period or less, additional training may be necessary in some situations. Animals are considered trained when they successfully cross into the dark chamber and the mean exit latency is under 5-10 seconds and the variability between animals is low. If there is significant spread in exit latencies across animals then additional training is likely necessary for the entire group. If a particular animal is responding more than 2 standard deviations from the group mean, it may require additional training or should be excluded. Normative crossing criteria are difficult to establish at this time (Fall 2011), given that we have only tested young, male Sprague-Dawley rats. Rats of different strains, ages, vendors, etc. may learn and perform at different rates and speeds. Duration on the probes has not been used as a training criterion.

## B. Stimulus-Response Assessment

*Overview.* Stimulus-Response Assessment involves measuring behavioral responses in previously trained animals (see Section A) to different probe heights. **This testing can be conducted in both naïve/control animals as well as animals with persistent pain induced via injury, surgery, lesion, injection, etc. It can also be conducted in the same animals before and after a pain induction procedure.** We recommend conducting a full Stimulus-Response Assessment when the MCS is first acquired or whenever a new animal type is implemented (different strain, vendor, age, etc.). This assessment procedure allows the user to determine the optimal testing parameters for his/her specific experiments.

| Session # | Pretest (mm) | Trial 1 (mm) | Trial 2 (mm) | Trial 3 (mm) |
|---|---|---|---|---|
| 1 (baseline) | 0 | 0 | 0 | 0 |
| 2 | 0 | 0.5 | 0.5 | 0.5 |
| 3 | 0 | 1 | 1 | 1 |
| 4 | 0 | 2 | 2 | 2 |
| 5 | 0 | 3 | 3 | 3 |
| 6 | 0 | 4 | 4 | 4 |
| 7 | 0 | 5 | 5 | 5 |
| 8 | 0 | 0 | 0 | 0 |

**Figure 1.** Stimulus-response experimental design**.**

The stimulus-response assessment is divided into multiple "sessions," each consisting of 1 "pretest" trial at 0 mm and 3 "test" trials at a specific probe height (Fig. 1). The pretest trial has two purposes: 1) to re-familiarize the animals to the MCS task and 2) to confirm crossing criteria is met. Stimulus-Response Assessment requires 10-12 rats and is conducted over a period of 5-8 days - one day of testing for each session. Probe heights are presented on a quasi-Latin square schedule which maintains a "no-probe" session at the beginning of the assessment sequence. This session establishes baseline performance characteristics for the animal being investigated. The remaining probe heights are presented in random order following this baseline. Thus on any given test day after the baseline session, different rats will be exposed to different probe heights (.5, 1, 2, 3, 4, and 5 mm). In addition, the order in

which animals are removed from their home cage and tested is randomized on each test day. *(Note: Some preliminary data indicates that experiencing a probe height <2mm upon the initial exposure to probes may yield subsequent latency to exit data at a given probe height that shows less variability than if a higher probe height is initially used.)*

An alternative strategy randomizes the entire cohort of animals to a single probe height each day until all the probe heights have been tested. Regardless of the randomization scheme that is used, each rat will have been tested at each probe height by the conclusion of the Stimulus-Response Assessment. The number of probe heights that are evaluated can be reduced to meet particular experimental needs and if the majority of animals fail to cross at a particular probe height, it is not necessary to assess higher probe heights as it is unlikely that crossing will occur. An optional second session of no probes can also be conducted after the normal Stimulus-Response Assessment to examine the effects of repeated testing on baseline performance.

*Note: During MCS beta testing, Stimulus-Response Assessments followed a within-subjects experimental design similar to that described above. However, other designs can be employed. For example, a between-subjects design evaluates separate groups at each probe height.*

*Procedure.* The general procedure for performing a Stimulus-Response Assessment with the MCS is identical to that described in section A.4 (Trainings Days Three, Four and Five). On each day of testing, rats first undergo a pretest trial with no probes before undergoing 3 test trials at a specific probe height with a minimum of 10 min between trials. The first session to be completed is the baseline ('0 mm") assessment. <u>Exit latency data acquired during this session will be used as the pretest crossing criterion for subsequent sessions.</u> **If pretest exit latency in a subsequent session is within 2 standard deviations of the mean exit latency obtained during the baseline session, then no further pretest trials are necessary and testing with a set probe height can continue. If an animal fails to meet this criterion or does not exit the light chamber at all, additional trials with no probes should be performed until performance returns to baseline levels.** Testing at a set pin height can be conducted after these additional no probe trials. *Note: The pretest can be conducted up to 2 hours before the 3 test trials.*

It is recommended that testing sessions are conducted only one time per day to avoid animal fatigue. If testing sessions are conducted more than once a day, each session should be separated by at least 2 hours. Testing can be conducted on consecutive days, every 2-3 days, or weekly. However, animals tested for more than 5 consecutive days may show performance decrements (i.e., increased exit latency, slow cross duration) and should be allowed 1-2 days of rest before testing is continued.

Mean exit latency and duration (time spent on probes), as well as frequency of completed crosses and light chamber exits, are recorded for each probe height to establish stimulus-response curves. Distance travelled (from the light box) is another variable of potential interest.

## C. Intervention Assessment

*Overview.* The effects of an antinociceptive treatment or intervention on acute or persistent pain can be assessed in MCS-trained animals. The general procedures for these tests are identical to those described in section A.4. However, instead of evaluating animal performance at multiple probe heights, only a single probe height is used as a noxious stimulus (similar to the Hargreaves radiant heat test). This height is determined from the Stimulus-Response Assessment (see Section B) as a probe height that produces consistent modifications in crossing behavior. The selected probe height should produce significant separation in performance characteristics compared to the no-probe condition, although it should not result in a ceiling effect (i.e., most animals not crossing). It should also show good test – retest reliability and no evidence of habituation.

In MCS beta testing, the 3 mm probe height reliably produced increased exit latency and decreased time spent on probes (duration) compared to the no probe baseline condition in male, Sprague-Dawley rats before and after chronic constriction injury (CCI). **For the sake of clarity, the 3 mm probe height will used throughout the remainder of this manual as an example of a probe height that meets the aforementioned probe criteria; however, 3 mm probes may not be suitable for all type of animals and in all situations and therefore it is recommend that users first complete the Stimulus-Response Assessment to determine the optimal probe height for their research.**

*Procedure.* Invention assessment follows a within-subjects (i.e., pre- vs. post-treatment) experimental design. Prior to treatment administration, all rats first complete two counter-balanced testing sessions over a two day period: 1) with no probes to establish baseline or normal crossing performance, and 2) with 3 mm probes to establish pre-treatment crossing performance with a noxious stimulus. Both sessions follow the standard 4 trial testing paradigm described above (1 pretest, 3 test trials). In this case, the pretest is used only to confirm that animals are still exiting the light chamber. It is recommended that when applicable baseline and pre-treatment testing sessions are conducted before and after procedures designed to produce persistent pain (e.g., surgery).

| Condition | Session # | MCS Test (mm) | Session Order |
|---|---|---|---|
| Pre-CCI | 1, 2 | 0, 3 | counter-balanced |
| CCI (no drug) | 3, 4 | 0, 3 | counter-balanced |
| CCI + drug dose 1 | 5 | 3 | random |
| CCI + drug dose 2 | 6 | 3 | |
| CCI + drug dose 3 | 7 | 3 | |
| CCI + vehicle | 8 | 3 | |
| CCI (no drug) | 9, 10 | 0, 3 | counter-balanced |

**Figure 2. Example of an intervention assessment experimental design.**

Post-treatment sessions at a set probe height are conducted after baseline and pre-treatment sessions. For example, in a dose-response study examining the effects of a drug on CCI-induced hyperalgesia, animals would undergo separate testing sessions at 3 mm for each dose of a drug (Fig. 2). Testing sessions are typically conducted on separate days and the amount of time between days/sessions depends on the characteristics of the treatment under study. In each post-treatment session, the standard sequence of 1 pretest with no probes and 3 test trials at a set probe height is followed. **However, it is critical that the pretest is conducted prior to treatment administration**. As in the Stimulus-Response Assessment, animals with pretest exit latency greater than 2 standard deviations from baseline should undergo additional trials without probes to restore baseline performance. The pretest, as well as the additional no

probe trials that may be necessary for retraining, can be conducted up to 2 hours before treatment administration and probe testing. Additional sessions with no probe (0 mm) test trials can also be conducted during an Intervention Assessment. These sessions would be used to detect possible treatment-induced motoric effects on normal crossing behavior.

*Note: In studies of chronic (daily) drug dosing, it is recommended when possible to conduct MCS testing several hours before or after the drug administration procedure (injection, oral gavage) to reduce the effects of handling and administration stress on MCS performance. In these studies, it is not necessary to separate the pretest and test trials*.

## D. Key Points for IACUC Application

- All experiments are performed under standard laboratory conditions of temperature and humidity. The MCS is cleaned of any urine or feces with a paper towel and water after each trial. Bedding and other debris is vacuumed at the end of each day. The MCS is plastic and can be fully disassembled for washing.

- Rats are given an option to escape a bright light to a rewarding dark location by traversing a chamber with nociceptive probes of differing heights. <u>It is the choice of the rat to expose itself to this noxious stimulus.</u> Rats that choose not to transverse the chamber will not undergo noxious stimulation.

- The nociceptive probes are stainless steel probes that are pointed enough to be painful but they do not cause tissue damage at any height. They can be removed for washing and are resistant to corrosion.

- Comparisons are made of the frequency of crosses, time to cross, and time to exit the light box versus probe height.

- Animals typically remain in the apparatus for less than 1 minute.

- The MCS is adequately ventilated by a plurality of floor holes.